CHAPTER 5. CHASSIS

CHAPTER 5. CHASSIS

5-1. FRONT WHEEL

A. Removal

1. Remove front brake wire and speedometer cable from front brake shoe plate.
2. Remove cotter pin from front axle nut.
3. Remove front axle nut.
4. Raise the front wheel of the motorcycle by placing a suitable stand under the engine.
5. Remove the front wheel axle by simultaneously twisting and pulling out on the axle. Then remove the wheel assembly.

B. Front Axle Inspection

Remove any corrosion from axle with emery cloth. Place the axle on a surface plate and check for bends. If bent, replace.

C. Front Wheel Inspection

1. Check for cracks, bends or warpage of wheels. If a wheel is deformed or cracked, it must be replaced.
2. Check wheel run-out
   If deflection exceeds tolerance, check wheel bearing or replace wheel as required.

Rim run-out limits: Vertical — 0.7 mm (0.028 in) Lateral — 1.3 mm (0.051 in)

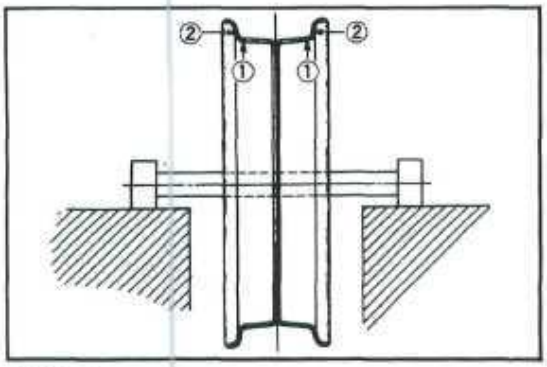

1. Vertical
2. Lateral

D. Brake Shoe Wear Inspection

1. Measure the brake shoe thickness at 3 or 4 points. If beyond wear limits, replace brake shoe.

Brake shoe wear limit: 2 mm (0.08 in)

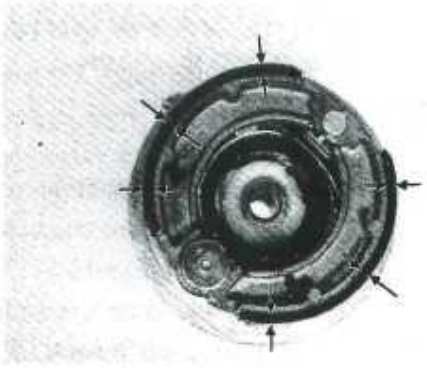

2. Remove any glazed areas from brake shoes using coarse sandpaper.

E. Brake Drum Inspection

Oil or scratches on the inner surface or the brake drum will impair braking performance or result in abnormal noises.

Remove oil by wiping with a rag soaked in lacquer thinner or solvent.

Remove scratches by lightly and evenly polishing with emery cloth

F. Brake Shoe Plate Inspection

1. Remove the camshaft and grease, sparingly if the cam face is worn, replace.
2. Check meter drive and driven gear for any signs of galling, using Meter Gear Bushing Remover. Replace as required.

G. Replacing Wheel Bearings

If the bearings allow play in the wheel hub or if wheel does not turn smoothly, replace the bearings as follows:

1. First clean the outside of the wheel hub.
2. Drive the bearing out by pushing the spacer aside (the spacer "floats" between the bearings) and tapping around the perimeter of the bearing inner race with a soft metal drift pin and hammer. Both bearings can be removed in this manner.
3. To install the wheel bearing, reverse the above sequence. Be sure to grease the bearing before installation. Use a socket that matches the outside race of the bearing as a tool to drive in the bearing.

CAUTION:

Do not strike the center race or balls of the bearing. Contact should be made only with the outer race.

H. Installing Front Wheel

When installing front wheel, reverse the removal procedure taking note of the following points:

1. Lightly grease lips of front wheel oil seals and gear teeth of speedometer drive and driven gears. Use light-weight lithium soap base grease.
2. Check for proper engagement of the boss on the outer fork tube with the locating slot on brake shoe plate.

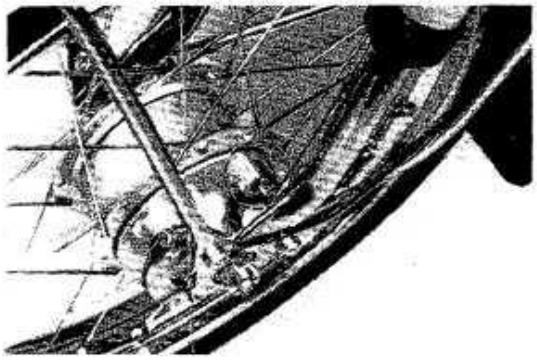

3. Always secure the front wheel axle as follows:
   a. Torque the front axle nut.

Axle nut torque: 4.0 m-kg (30 ft-lb)

   b. Install a new cotter pin.

5-2. REAR WHEEL

A. Removal

1. Remove rear fender.
2. Remove rear brake wire.
3. Remove rear wheel nut.
4. Remove rear wheel from shaft drive housing.

B. Rear Wheel Inspection

Check wheel run-out without removing the wheel from the frame and by running the engine.

Rim run-out limits: Vertical — 0.7 mm (0.028 in) Lateral — 1.3 mm (0.051 in)

C. Brake Shoe Wear Inspection

See Front Brake Shoe Wear Inspection procedure.

D. Rear Drum Inspection

See Front Drum Inspection procedures.

E. Brake Shoe Plate Inspection

See Front Brake Shoe Plate Inspection 1) procedure.

F. Installing Rear Wheel

Tighten the rear wheel shaft nut.

Rear wheel shaft nut torque: 6.0 m-kg (43 ft-lb)

Front wheel

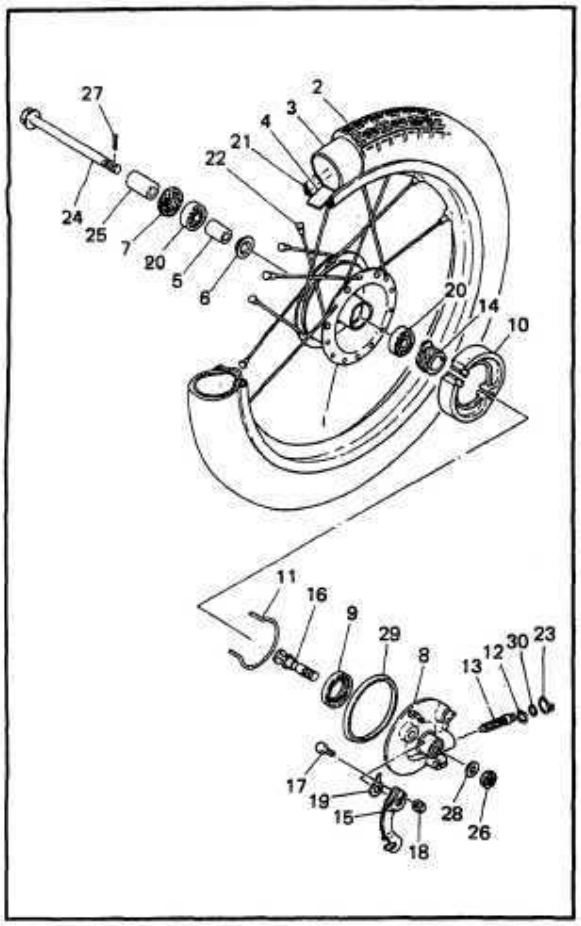

1. Front hut
2. Front tire
3. Front tube
4. Rim bannd
5. Spacer
6. Spacer flange
7. Oil seal
8. Brake shoe comp.
9. Plate dust seal
10. Brake shoe comp.
11. Shoe return spring
12. Stop ring
13. Meter gear
14. Drive gear
15. Camshaft lever
16. Camshaft
17. Hexagon bolt
18. Hexagon nut
19. Indicator
20. Bearing
21. Front rim
22. Front spoke set
23. Stop ring
24. Wheel axle
25. Collar
26. Castle nut
27. Cotter pin
28. Plain washer
29. Ring
30. O-ring

Rear wheel

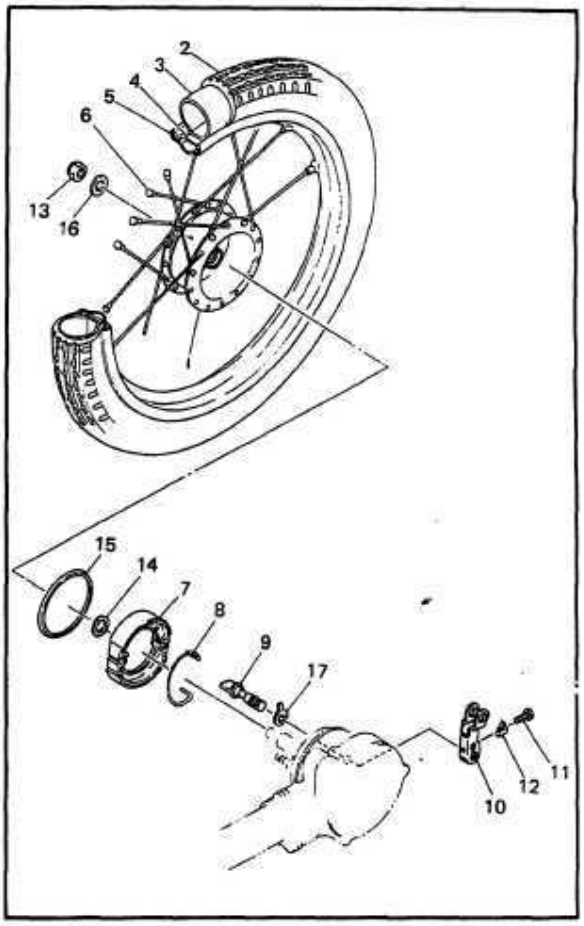

1. Rear hub
2. Rear tire
3. Rear tube
4. Rim band
5. Rear rim
6. Rear spoke set
7. Brake shoe comp.
8. Shoe return spring
9. Camshaft
10. Camshaft lever
11. Hexagon bolt
12. Lock washer
13. Self locking nut
14. Plate washer
15. Ring
16. Plate washer
17. Indicator

5-3. SHAFT DRIVE

This shaft drive system relieves the owner from such trouble maintenance jobs as chain adjustment, oiling the chain, replacement of a worn sprocket, etc.

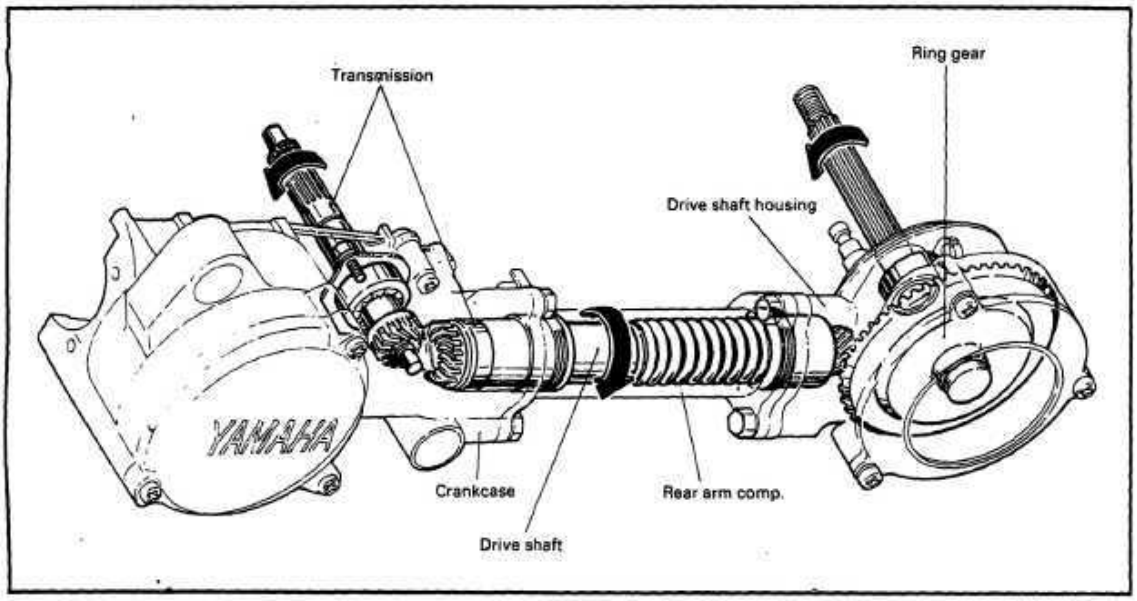

A. Removal

1. Remove the six bolts shown in the figure below.

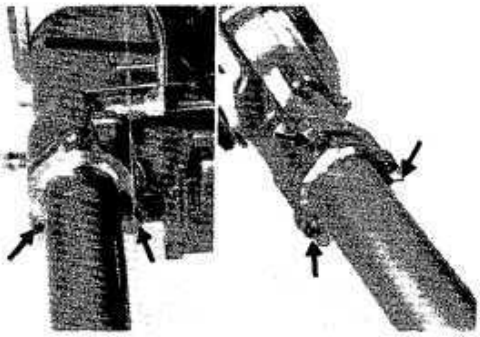

2. Using the special tool, remove the screw (turning to left), spacer, bearings and shim, together with the drive pinion.

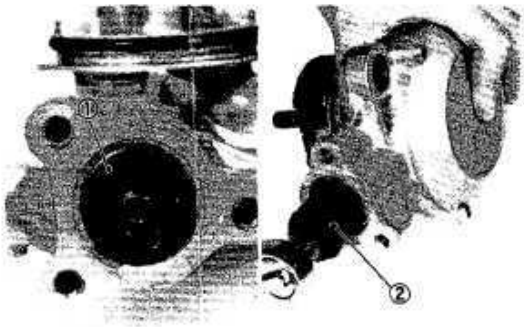

1. Screw 2. Hexagon wrench

3. Remove the screw securing the housing cover to the drive housing, and remove the O-ring, together with the housing cover.

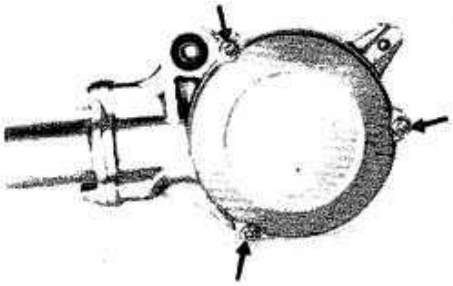

4. Remove the ring gear from the drive housing.

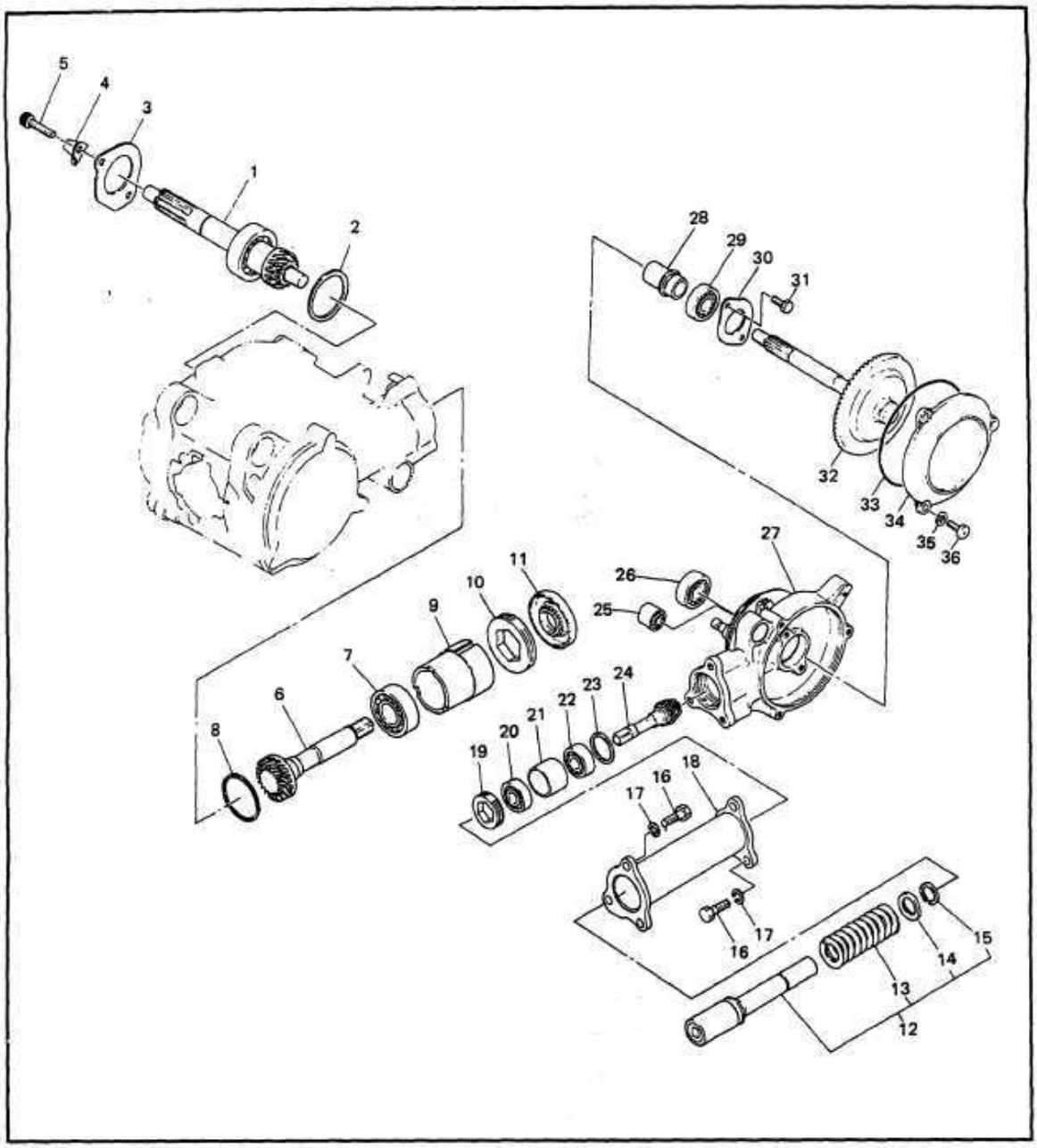

1. Main axle comp.
2. Pinion shim
3. Cover plate
4. Stopper
5. Bolt
6. Middle driven pinion
7. Bearing
8. Thrust shim
9. Distance collar
10. Screw
11. Oil seal
12. Shaft drive assembly
13. Compression spring
14. Spring retainer
15. Circlip
16. Hexagon bolt
17. Spring washer
18. Rear arm comp.
19. Screw
20. Bearing
21. Spacer
22. Bearing
23. Drive pinion shim
24. Drive pinion assembly
25. Rear cushion bushing
26. Bearing
27. Shaft drive housing
28. Bearing spacer
29. Bearing
30. Cover plate
31. Hexagon bolt
32. Ring gear comp.
33. O-ring
34. Housing cover
35. Plate washer
36. Panhead screw

B. Shaft Drive Inspection

1. Unlike the chain drive system, the shaft drive system does not require frequent maintenance such as chain tension adjustment, oiling, replacement of a worn sprocket, but it is advisable to grease the drive pinion and ring gear teeth periodically.

Recommended lubricant:
Lithium base wheel bearing grease
(EX. SHELL LETHINAX A)
Grease quantity: 10 g (0.4 oz)
Lubrication intervals:
Every 2 years

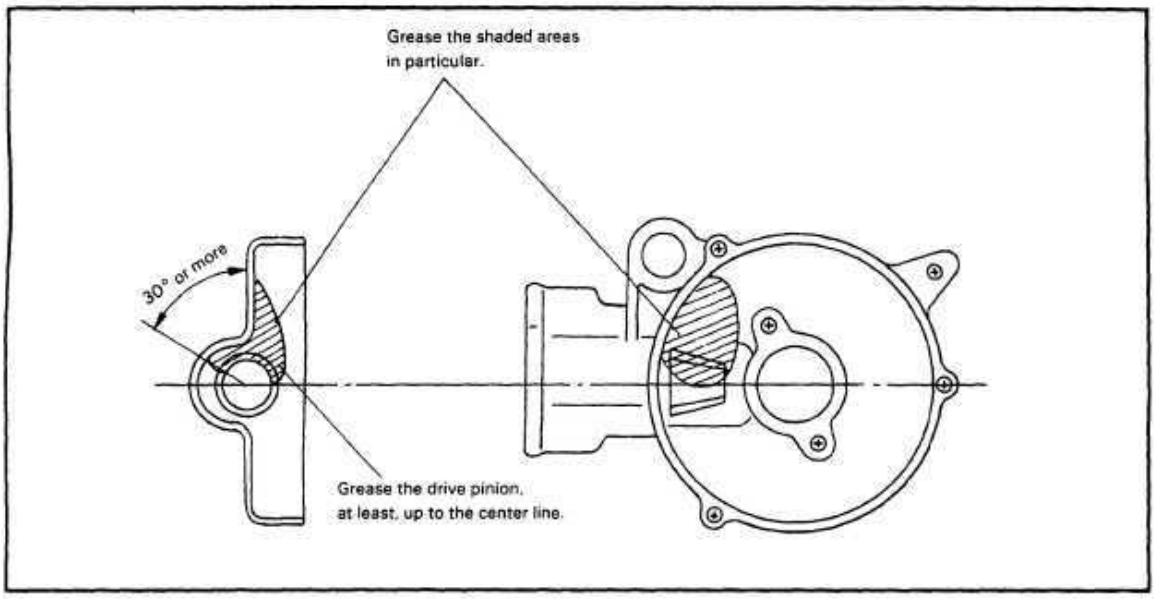

2. Ring gear complete
   Measure the deflection of ring gear complete using a dial gauge.

Deflection limit: 0.08 mm (0.0031 in)

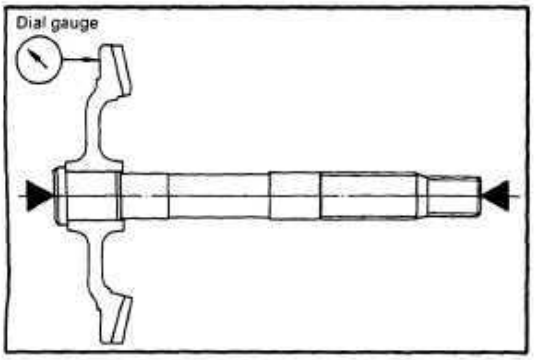

3. Drive pinion and ring gear complete
   Check the gear teeth for damage and scratches. If teeth are excessively damaged or scratched, replace both.

4. Drive shaft bearing and shaft drive housing bearing checking.
   Check bearing for wear, damage. If necessary, replace them.
5. Greacing the bearing.
   Before installing the bearing(s), apply grease to bearing. Do not over pack.

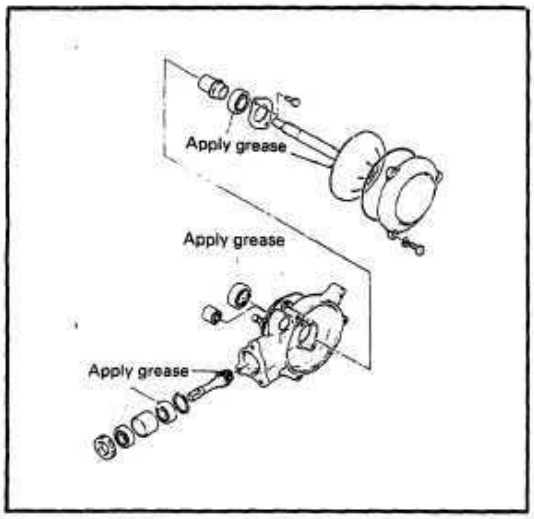

Recommended grease:
Lithium base wheel bearing grease
(EX. SHELL LETHINAX A)

Tightening torque.

Drive shaft housing screw:	5.0 m-kg (36 ft-lb)
Rear arm comp. holding screw:	2.5 m-kg (18 ft-lb)

6. Housing cover installation
   When installing the housing cover, make sure that the O-ring is correctly fitted in the groove on the cover.

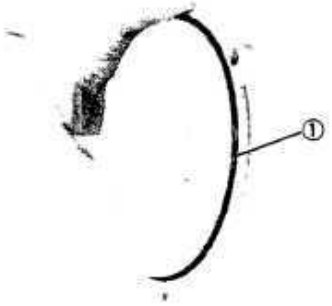

1. O-ring

5-4. FRONT FORKS

A. Disassembly

1. Remove the rear brake cable and starter wire from the handlebars.
2. Remove the headlight unit and front panel 1, and disconnect lead wires.

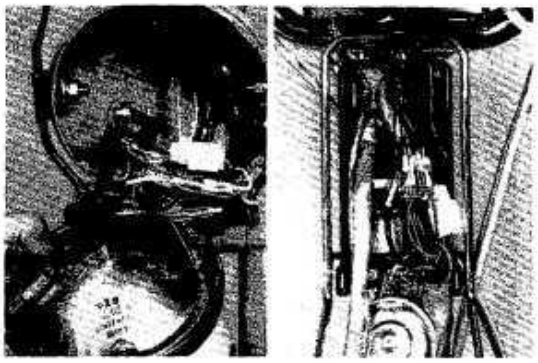

3. Remove front panel 2, plate, front carrier, and ball race cover.
4. Loosen the fitting nuts (two pieces).

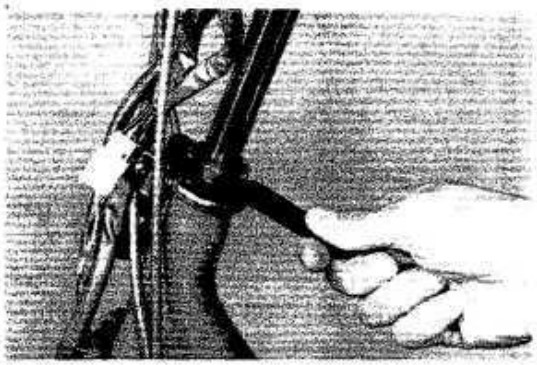

5. Loosen the handlebar fitting bolt, remove the handlebar complete by tapping the bolt with a soft-faced hammer, and the handlebar complete can now be removed from the front fork assembly.
   Next, remove the fitting nuts (two pieces), horn and carrier bracket.

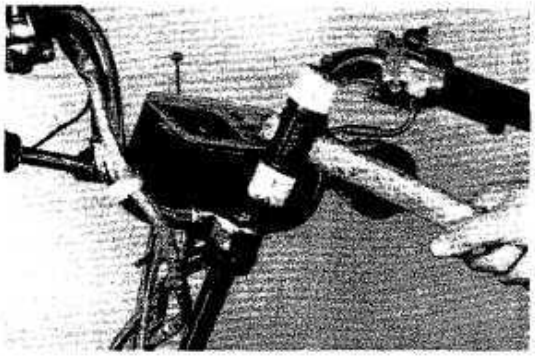

6. Remove the speedometer cable and front frake cable from the front brake show plate.
7. Place a proper stand under the engine, and remove the front fender and front wheel assembly.
8. Remove ball race 1, and the front fork assembly can not be removed.

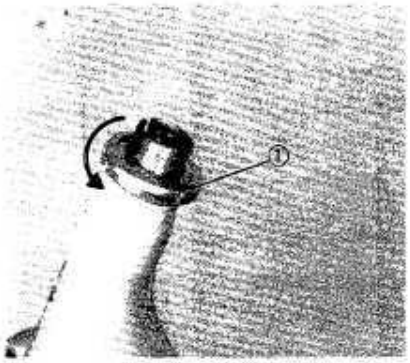

1. Ball race 1

NOTE:

Be careful not to drop the ball.

9. Place the under bracket complete upside down, remove the circlip, and now the inner tube can be removed. Be careful not to damage the inner tube surface.

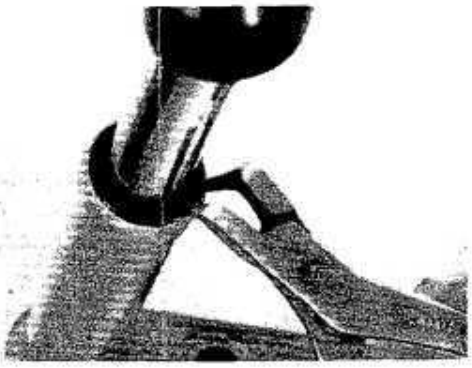

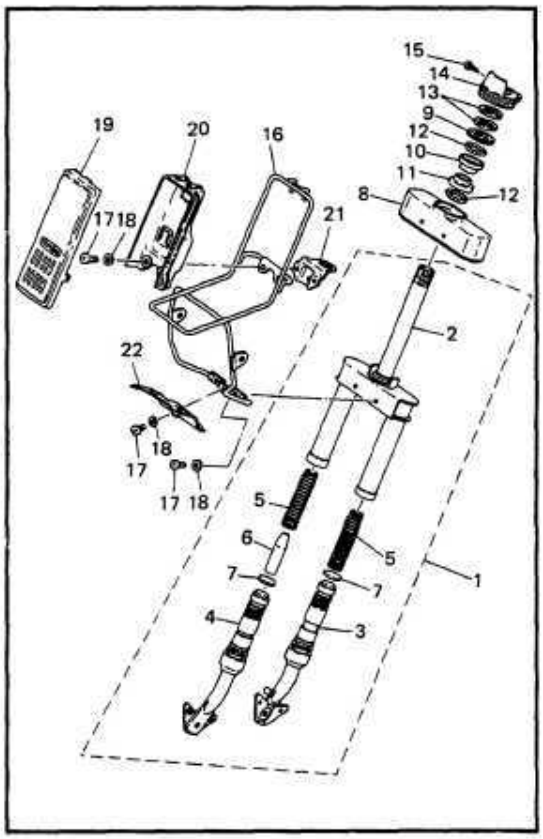

1. Front fork assembly
2. Under bracket comp.
3. Left inner tube assembly
4. Right inner tube assembly
5. Front fork spring
6. Rubber
7. Spring under seat
8. Outer panel
9. Ball race 1
10. Ball race 2
11. Ball race 3
12. Ball
13. Fitting nut
14. Ball race cover
15. Panhead tapping screw
16. Front carrier
17. Panhead screw
18. Plate washer
19. Front panel 1
20. Front panel 2
21. Carrier bracket
22. Plate

B. Inspection

1. Check if there is no catch when the dust seal, slide metal, collar and spring slide up and down.
2. Check the inner tube and piston for scratches and dust. Also make sure the circlip is correctly fitted in the groove when assembling.
   If the circlip is distorted or fatigued, replace it together with the inner tube.

C. Reassembly

1. For assembly, reverse the procedure for disassembly.
2. Tighten the handlebar fitting bolt.

Tightening torque: 2.8 m-kg (20 ft-lb)

5-5. STEERING HEAD

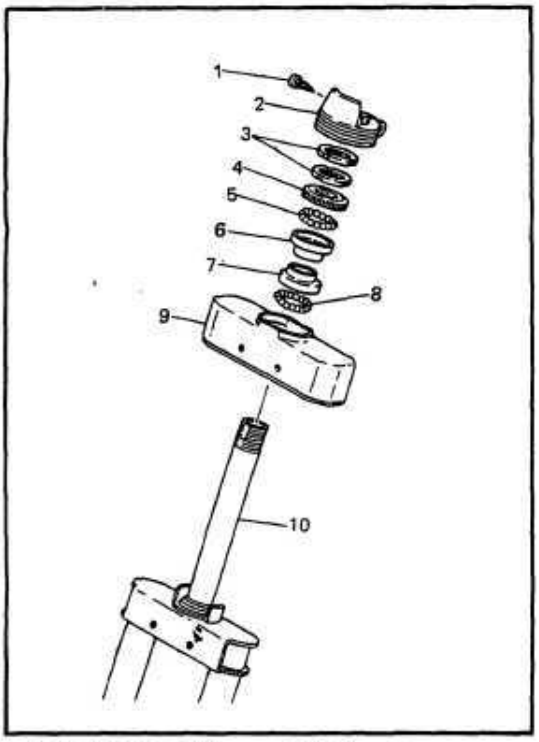

1. Panhead tapping screw
2. Ball race cover
3. Fitting nut
4. Ball race 1
5. Ball
6. Ball race 2
7. Ball race 3
8. Ball
9. Outer panel
10. Under bracket comp.

A. Inspection

1. Examine all the balls for pits or partial flatness. If any one is found defective, the entire set (including both races) should be replaced. If either race is pitted, shows rust spots, or is damaged in any way, replace both races and all balls.

Ball quantity and size:	
Upper	26 pcs, 5/32 in
Lower	26 pcs, 5/32 in

2. Examine dust seal under lowest race and replace if damaged.
3. Grease the lower ball race of the upper and lower assembly and arrange the balls around it. Then apply more grease and the top race into place.

NOTE:

Use medium-weight wheel bearing grease of a quality manufacturer — preferably waterproof.

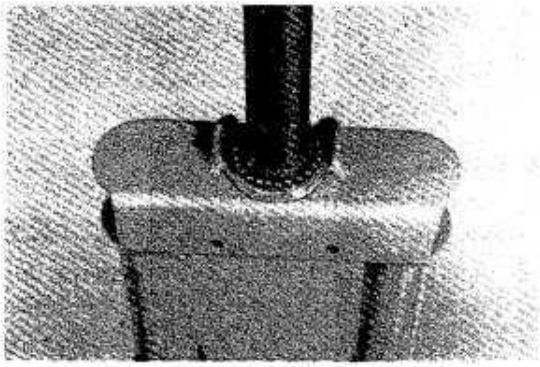

5-6. CABLES AND FITTINGS

A. Cable Maintenance

NOTE:

See Maintenance and Lubrication Intervals charts for additional information. Cable maintenance is primarily concerned with preventing deterioration through rust and weathering and providing for proper lubricaton to allow the cable to move freely within its housing. Cable removal is straight-forward and uncomplicated. Removal will not be discussed within this section. For details, see the individual maintenance section for which the cable is an integral part.

WARNING:

Cable routing is very important, for details of cable routing, see the cable routing diagrams at the end of the manual. Improperly routed, assembled, lubricated or adjusted cables may render the vehicle unsafe for operation.

1. Remove the cable.
2. Check for free movement of cable within its housing. If movement is obstructed, check for fraying or kinking of cable strands. If damage is evident, replace the cabe assembly.
3. To lubricate cable, hold in vertical position. Apply lubricant to uppermost end of cable. Leave in vertical position until lubricant appears at bottom. Allow excess to drain and re-install.

NOTE:

Use Yamaha Chain and Cable Lube.

B. Throttle Maintenance

1. Remove Phillips head screws from throttle housing assembly and separate two halves of housing.
2. Disconnect cable end from throttle grip assembly and remove grip assembly.
3. Wash all parts in mild solvent and check contact surfaces for burrs or other damage. (Also clean and inspect right-hand end of handlebar.)
4. Lubricate contact surfaces with light coat of lithium soap base grease and reassemble.

NOTE:

Tighten housing screws evenly to maintain an even gap between the two halves.

5. Check for smooth throttle operation and quick spring return when released and make certain that housing does not rotate on handlebar.

C. Cable Junction Maintenance

The throttle cable cylinder (junction point for Autolube control cable) must be periodically maintained.

1. Remove throttle cable (1) from handlebar housing.
2. Remove throttle cable (2) from carburetor mixing chamber top.
3. Remove Autolube pump cable from pump pulley. Remove cable adjuster.
4. Remove the cable/Cylinder assembly.
5. Remove cylinder cap, throttle cable (2) and Autolube pump cable.
6. Wash assembly thoroughly in kerosene.
7. Lubricate all cables.
8. Apply a thin coating of lubricant to cylinder walls.

NOTE:

A small amount of lithium soap base grease may be used in lieu of cable lubricant. However, if machine is to be used in extreme cold, use cable lubricant.

9. Reassemble all cables. Seal cylinder to keep from damage due to adverse weather an riding conditions. Reinstall cables using CABLE ROUTING DIAGRAMS in back of book. See Mechanical Adjustments chapter for correct cable djustment.

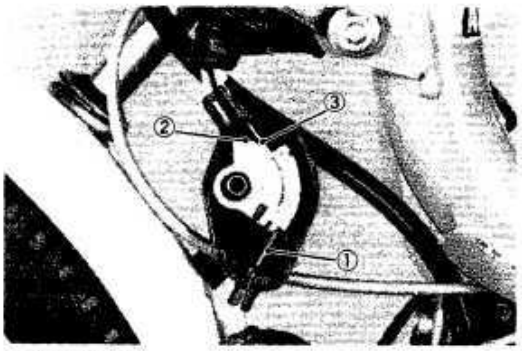

1. Throttle cable 1
2. Throttle cable 2
3. Pump wire