HOW TO USE THIS MANUAL

Follow the Maintenance Schedule recommendations to ensure that the vehicle is in peak operating condition and the emission levels are within the standards set by the U.S. Environmental Protection Agency. Performing the first scheduled maintenance is very important. It compensates for the initial wear that occurs during the break-in period.

Sections 1 through 3 apply to the whole motor scooter, while sections 4 through 14 describe parts of the motor scooter, grouped according to location.

Find the section you want on this page, then turn to the table of contents on page 1 of that section.

Most sections start with an assembly or system illustration, service information and troubleshooting for the section. The subsequent pages give detailed procedures.

If you don't know what the source of the trouble is, refer to section 16, Troubleshooting.

All information, illustrations, directions and specifications included in this publication are based on the latest product information available at the time of approval for printing. Honda Motor Co., Ltd. reserves the right to make changes at any time without notice and without incurring any obligation whatever.
No part of this publication may be reproduced without written permission.

HONDA MOTOR CO., LTD.
Service Publications Office

CONTENTS

	GENERAL INFORMATION	1
	LUBRICATION	2
	MAINTENANCE	3
ENGINE	FUEL SYSTEM	4
ENGINE	ENGINE REMOVAL/INSTALLATION	5
ENGINE	CYLINDER HEAD/CYLINDER/PISTON	6
ENGINE	ALTERNATOR	7
ENGINE	DRIVE AND DRIVEN PULLEYS/CLUTCH	8
ENGINE	FINAL REDUCTION	9
ENGINE	CRANKCASE/CRANKSHAFT	10
CHASSIS	FRAME COVERS	11
CHASSIS	STEERING/FRONT WHEEL/BRAKE/ SUSPENSION	12
CHASSIS	REAR WHEEL/BRAKE/SUSPENSION	13
ELECTRICAL	ELECTRICAL EQUIPMENT	14
ELECTRICAL	WIRING DIAGRAM	15
	TROUBLESHOOTING	16

Date of Issue: December, 1984
© HONDA MOTOR CO., LTD.

1. GENERAL INFORMATION

GENERAL SAFETY	1-1	TORQUE VALUES	1-5
SERVICE RULES	1-1	TOOLS	1-6
MODEL IDENTIFICATION	1-2	CABLE & HARNESS ROUTING	1-7
SPECIFICATIONS	1-3	NOISE EMISSION CONTROL SYSTEMS (U.S.A. only)	1-10

GENERAL SAFETY

WARNING

If the engine must be running to do some work, make sure the area is well-ventilated. Never run the engine in a closed area. The exhaust contains poisonous carbon monoxide gas.

WARNING

Gasoline is extremely flammable and is explosive under certain conditions. Do not smoke or allow flames or sparks in your working area.

WARNING

The battery electrolyte contains sulfuric acid. Protect your eyes, skin and clothing. In case of contact, flush thoroughly with water and call a doctor if electrolyte gets in your eyes.

WARNING

The battery generates hydrogen gas which can be highly explosive. Do not smoke or allow flames or sparks near the battery, especially while charging it.

SERVICE RULES

1. Use genuine HONDA or HONDA-recommended parts and lubricants or their equivalents. Parts that do not meet HONDA's design specifications may damage the scooter.
2. Use the special tools designed for this scooter.
3. Use only metric tools when servicing this scooter. Metric bolts, nuts, and screws are not interchangeable with English fasteners. The use of incorrect tools and fasteners may damage the scooter.
4. Install new gaskets, O-rings, cotter pins, lock plates, etc. when reassembling.
5. When tightening bolts or nuts, begin with larger-diameter or inner bolts first, and tighten to the specified torque diagonally in 2 or 3 steps, unless a particular sequence is specified.
6. Clean parts in non-flammable or high flash point solvent upon disassembly. Lubricate any sliding surfaces before reassembly.
7. After reassembly, check all parts for proper installation and operation.
8. Route all eletrical wires as shown on page 1-7, Cable and Harness Routing, and always away from sharp edges and areas where they might be pinched between moving parts.

MODEL IDENTIFICATION

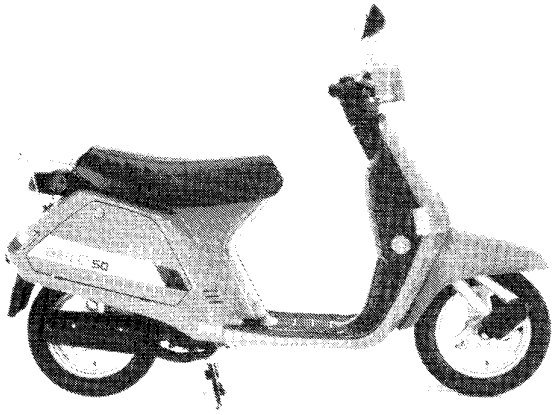

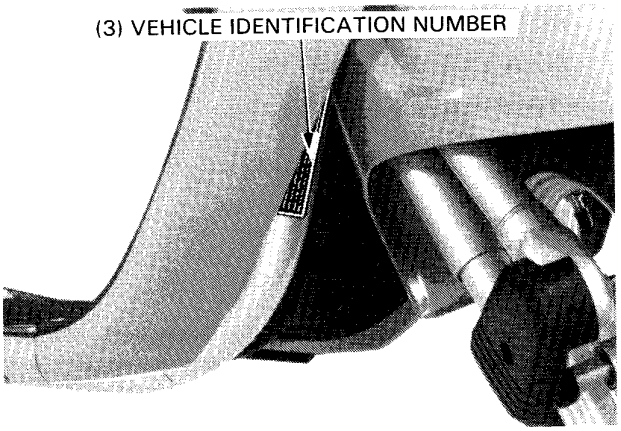

The vehicle identification number is on the frame tube in front of the right front cover.

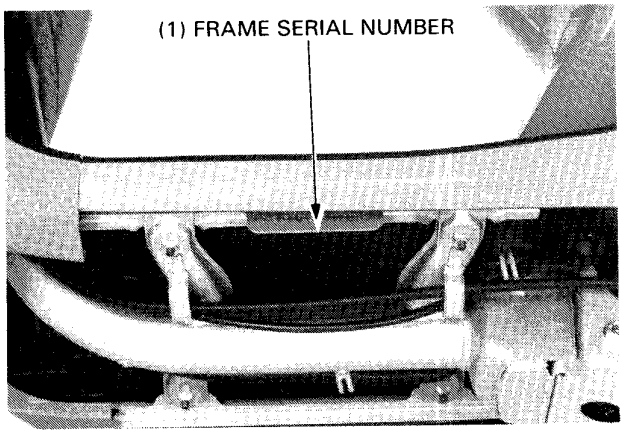

The frame serial number is stamped on the left side of the frame.

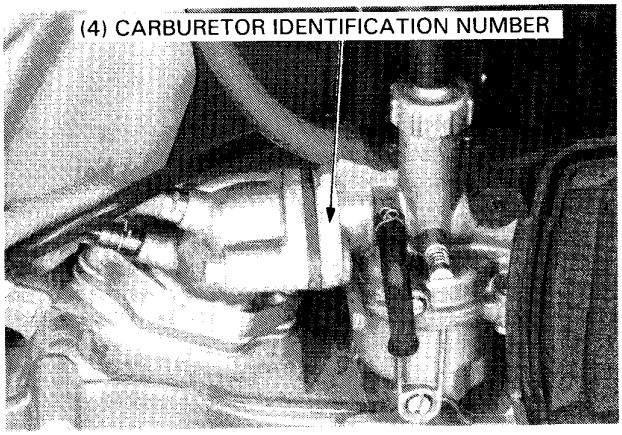

The carburetor identification number is on the left side of the carburetor body.

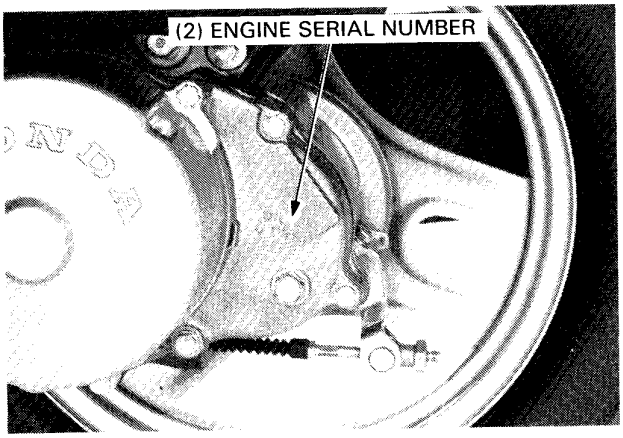

The engine serial number is stamped on the left side of the engine case.

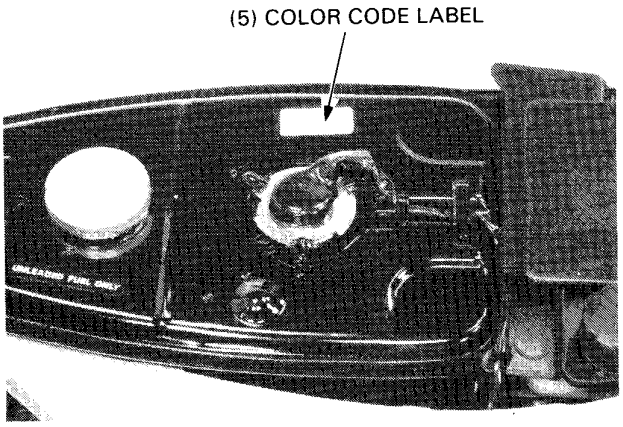

The color code label is attached to the fuel tank below the seat. When ordering a color coded part, always specify its designated color.

SPECIFICATIONS

ITEM		SPECIFICATIONS
DIMENSIONS	Overall length	1,595 mm (62.8 in)
	Overall width	625 mm (24.6 in)
	Overall height	965 mm (38.0 in)
	Wheel base	1,130 mm (44.5 in)
	Ground clearance	100 mm (3.9 in)
	Dry weight	55 kg (121.3 lb)
FRAME	Type	Back bone
	Front suspension, travel	Trailing link, 43 mm (1.69 in)
	Rear suspension, travel	Final drive unit/swing arm 60 mm (2.36 in)
	Vehicle capacity load	82 kg (180 lb)
	Front tire size, pressure	2.75−10−4PR, 150 kPa (1.5 kg/cm², 21 psi)
	Rear tire size, pressure	2.75−10−4PR, 200 kPa (2.0 kg/cm², 28 psi)
	Front brake	Internal expanding shoe
	Rear brake	Internal expanding shoe
	Fuel capacity	3.7 liter (0.98 U.S. gal., 0.81 Imp. gal.)
	Caster angle	28°
	Trail	77 mm (3.0 in)
ENGINE	Type	Air cooled 2-stroke
	Cylinder arrangement	Single cylinder inclined 15° from vertical
	Bore and stroke	41 x 37.4 mm (1.61 x 1.47 in)
	Displacement	49.3 cm³ (3.0 cu, in)
	Compression ratio	6.8 : 1
	Transmission oil capacity	90 cc (3.0 U.S. oz, 2.5 Imp. oz)
	Oil tank capacity	0.8 liter. (0.85 U.S. qt, 0.70 Imp. qt)
	Lubrication system	Oil automatically mixed with gasoline
	Port timing	
	Intake Open	Reed valve controlled
	Close	Reed valve controlled
	Exhaust Open	76° (BBDC)
	Close	76° (ABDC)
	Scavenge Open	57° (BBDC)
	Close	57° (ABDC)
	Engine dry weight	14 kg (30.9 lb)
	Idle speed	1,800 ± 100 min⁻¹ (rpm)
CARBURETION	Carburetor type	Piston valve
	Identification number	PA04G
	Air screw initial setting	1-1/4 turns out
	Float level	12.2 mm (0.48 in)

ITEM		SPECIFICATIONS	
DRIVE TRAIN	Clutch type	Automatic dry centrifugal clutch	
	Primary reduction	V-Belt	
	Gear ratio	2.4—0.8:1	
	Final reduction	11.097:1	
ELECTRICAL	Ignition	Condenser capacitive discharge ignition (CDI)	
	Starting system	Starter motor	
	Alternator	12V 96W/5,000 min^{-1} (rpm)	
	Spark plug	NGK	ND
	Standard	BPR6HSA, BPR6HS	W20FPR-L, W20FPR
	For cold climate	BPR4HSA, BPR4HS	W14FPR-L
	For extended high speed riding	BPR8HSA, BPR8HS	W24FPR-L, W24FPR
	Spark plug gap	0.6—0.7 mm (0.024—0.028 in)	
	Ignition timing "F" mark	13° BTDC at 1,800 ± 100 min^{-1} (rpm)	
	Battery capacity	12V3AH	
	Fuse capacity	7A	
LIGHTS	Headlight Low/High	12V-25/25W	
	Tail/stoplight	12V-2/32 cp	SAE No. 2057
	Turn signal Front/Rear	12V-32 cp	SEA No. 1073
	Speedometer light	12V-1 cp x 2	SAE No. 53
	High beam indicator	12V-1 cp	SAE No. 53
	Turn signal indicator	12V-2 cp	SAE No. 57

TORQUE VALUES

ENGINE

Item	Q'ty	Thread Dia (mm)	Torque N·m (kg-m, ft-lb)	Remarks
Cylinder head	4	6	9–12 (0.9–1.2, 7–9)	While the engine is cold.
Flywheel	1	10	35–40 (3.5–4.0, 25–29)	(Below 35°C, 95°F)
Drive pulley	1	10	35–40 (3.5–4.0, 25–29)	
Intake pipe	2	6	8–12 (0.8–1.2, 6–9)	While the engine is cold.
Clutch outer	1	10	35–40 (3.5–4.0, 25–29)	(Below 35°C, 95°F)
Carburetor	2	6	9–12 (0.9–1.2, 7–9)	While the engine is cold.
Clutch lock nut	1	28	35–40 (3.5–4.5, 25–29)	(Below 35°C, 95°F)

CHASSIS

Item	Q'ty	Thread Dia (mm)	Torque N·m (kg-m, ft-lb)	Remarks
Steering stem nut	1	25.4	80–120 (8.0–12.0, 58–87)	
Front axle nut	1	10	40–50 (4.0–5.0, 29–36)	Self-locking nut
Steering stem lock nut	1	25.4	5–13 (0.5–1.3, 4–10)	
Front shock absorber upper mount bolt	2	8	20–30 (2.0–3.0, 14–22)	
Front shock absorber lower mount bolt	2	8	0.8–1.2 (0.08–0.12, 0.6–0.9)	
Front shock absorber lower mount nut	2	8	15–20 (1.5–2.0, 11–14)	
Pivot arm bolt lower mount bolt	2	8	27–33 (2.7–3.3, 20–24)	
Engine hanger bolts	2	8	35–45 (3.5–4.5, 25–33)	Self-locking nut
Rear axle nut	1	14	80–100 (8.0–10.0, 58–72)	Self-locking nut
Rear shock absorber (Upper)	1	10	30–45 (3.0–4.5, 22–33)	
Rear shock absorber (Lower)	1	8	20–30 (2.0–3.0, 14–22)	
Front/Rear brake arm	2	5	4–7 (0.4–0.7, 3–5)	

Torque specifications listed above are for specific fasteners. Others should be tightened to the standard torque values below.

STANDARD TORQUE VALUES

Item	Torque Values N·m (kg-m, ft-lb)	Item	Torque Values N·m (kg-m, ft-lb)
5 mm bolt and nut	4.5–6 (0.45–0.6, 3–4)	5 mm screw	3.5–5 (0.35–0.5, 2–4)
6 mm bolt and nut	8–12 (0.8–1.2, 6–9)	6 mm screw and 6 mm bolt with 8 mm head	7–11 (0.7–1.1, 5–8)
8 mm bolt and nut	18–25 (1.8–2.5, 13–18)	6 mm flange bolt and nut	10–14 (1.0–1.4, 7–10)
10 mm bolt and nut	30–40 (3.0–4.0, 22–29)	8 mm flange bolt and nut	24–30 (2.4–3.0, 17–22)
12 mm bolt and nut	50–60 (5.0–6.0, 36–43)	10 mm flange bolt and nut	35–45 (3.5–4.5, 25–33)

TOOLS

SPECIAL

Description	Tool Number	Alternate Tool	Tool number	Ref.Sec
Vacuum pump (U.S.A. only)	A937X—041—XX XXX	Vacuum pump (U.S.A. only: Included in turbo kit)	ST—AH—260—MC7	4
*Lock nut wrench, 39 mm	07916—1870002	39 mm socket		8
*Universal bearing puller	07631—0010000			10
Case puller	07935—KG80000			10
Lock nut wrench	07916—1870100	Equivalent commercially available in U.S.A.		12
Lock nut wrench	07916—GK00000			12
Attachment, 28 x 30 mm	07946—1870100			8, 12
Clutch spring compressor	07960—KJ90000			8
Assembly collar	07965—1480100			9, 10
Assembly bolt	07965—1480200			9, 10
Shock absorber compressor attachment	07967—GA70101			12, 13
Spring attachment	07967—1180100			13
Bearing remover, 15 mm	07936—KC10500			9
Bearing remover, 12 mm	07936—1660100			9
Bearing remover, 17 mm	07936—3710300			8
Remover handle	07936—3710100			8, 9
Remover weight	07741—0010201	Remover weight	07936—3710200	8, 9
Shock absorber compressor spring attachment	07967—KM10100			12
Bearing driver	07945—GC80000			8
Case puller	07935—GK80000			10

*These tools are not available in the U.S.A. Equivalent tools or commercially available in the U.S.A. or other methods are recommended. Refer to the alternate tool column.

COMMON

Description	Tool Number	Alternate Tool	Tool number	Ref.Sec
Float level gauge	07401—0010000			4
Universal holder	07725—0030000			7, 8
Flywheel puller	07733—0010000	Flywheel puller	07933—0010000	7
Attachment, 32 x 35 mm	07746—0010100			9
Attachment, 37 x 40 mm	07746—0010200			9, 10
Attachment, 42 x 47 mm	07746—0010300			10, 12
Pilot, 10 mm	07746—0040100			12
Pilot, 12 mm	07746—0040200			9
Pilot, 15 mm	07746—0040300			9
Pilot, 17 mm	07746—0040400			9, 10
Pilot, 20 mm	07746—0040500			10
Driver	07749—0010000			8, 9, 10, 12
Bearing remover shaft	07746—0050100	Equivalent commercially available in U.S.A.		12
Bearing remover head, 10 mm	07746—0050200			12
Shock absorber compressor	07959—3290001			12, 13
Lock nut wrench, 30 x 32 mm	07716—0020400	Equivalen commercially available in U.S.A.		12
Extension bar	07716—0020500			12

CABLE & HARNESS ROUTING

Note the following when routing cables and wire harnesses.

- A loose wire harness or cable can be a safety hazard. After clamping, check each wire to be sure it is secure.
- Do not squeeze wires against a weld or end of a clamp.
- Secure wires and wire harnesses to the frame with their respective wire bands at the designated locations. Tighten the bands so that only the insulated surfaces contact the wires or wire harnesses.
- Route harnesses so they are not pulled tight or have excessive slack.
- Protect wires and harnesses with electrical tape or tubes if they contact a sharp edge or corner.
  Clean the attaching surface thoroughly before applying tape.
- Do not use wires or harnesses with broken insulation. Repair by wrapping them with a protective tape or replace them.
- Route wire harnesses to avoid sharp edges and corners. Also avoid the projected ends of bolts and screws.
- Keep wire harnesses away from the exhaust pipes and other hot parts.
- Be sure grommets are seated in their grooves properly.
- After clamping, check each harness to be certain that it is not interfering with any moving or sliding parts.
- Wire harnesses routed along the handlebars should not be pulled taut, have excessive slack, be pinched, or interfere with adjacent or surrounding parts in all steering positions.
- After routing, check that the wire harnesses are not twisted or kinked.

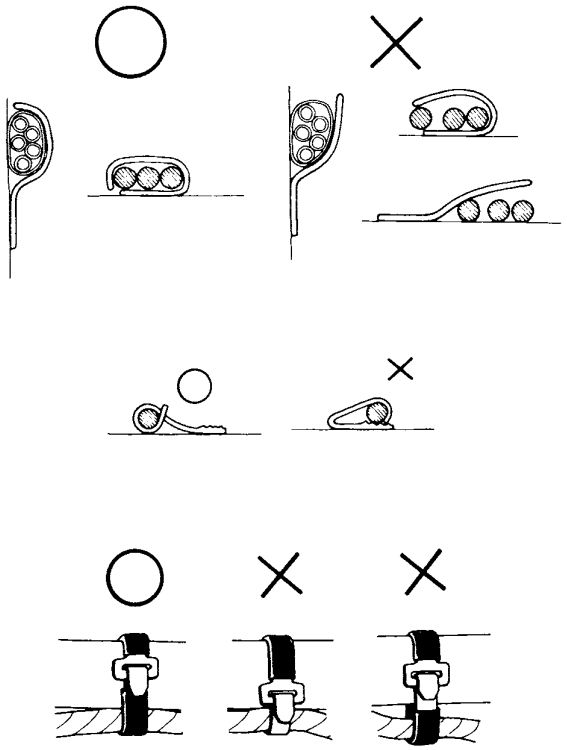

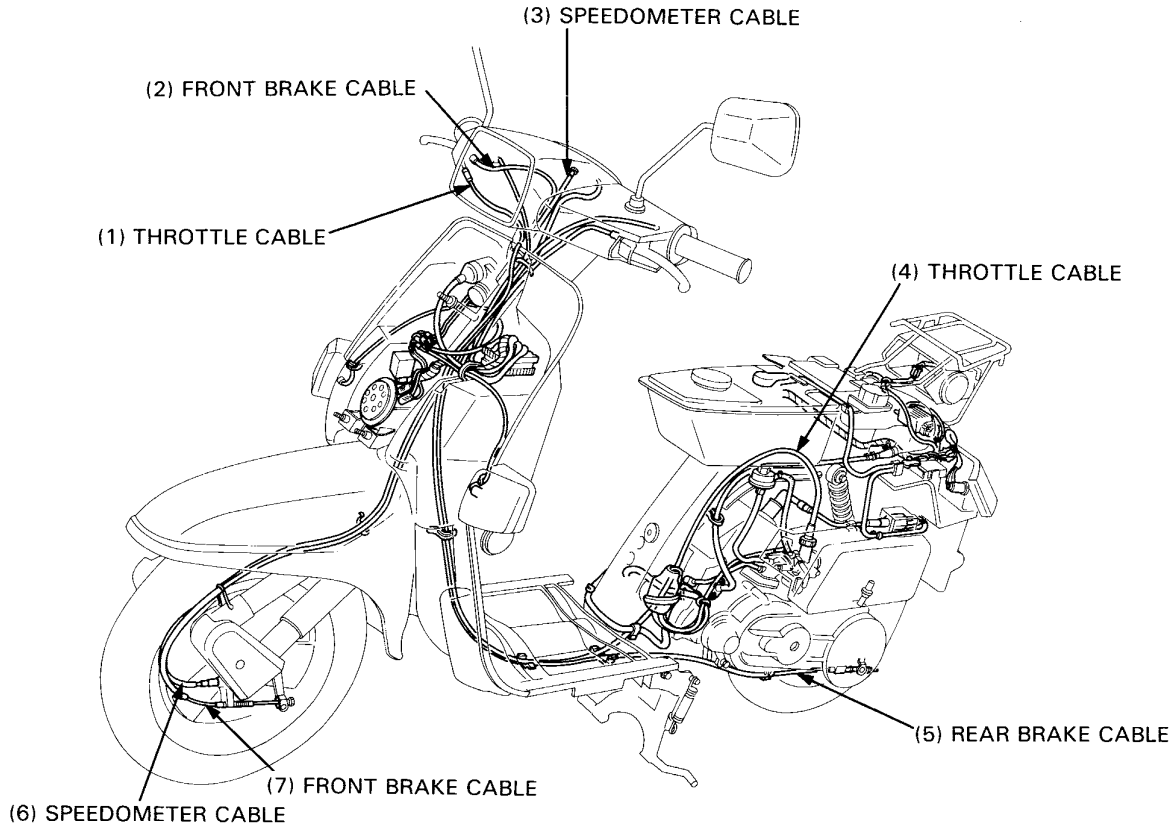
(3) SPEEDOMETER CABLE
(2) FRONT BRAKE CABLE
(1) THROTTLE CABLE
(4) THROTTLE CABLE
(5) REAR BRAKE CABLE
(7) FRONT BRAKE CABLE
(6) SPEEDOMETER CABLE

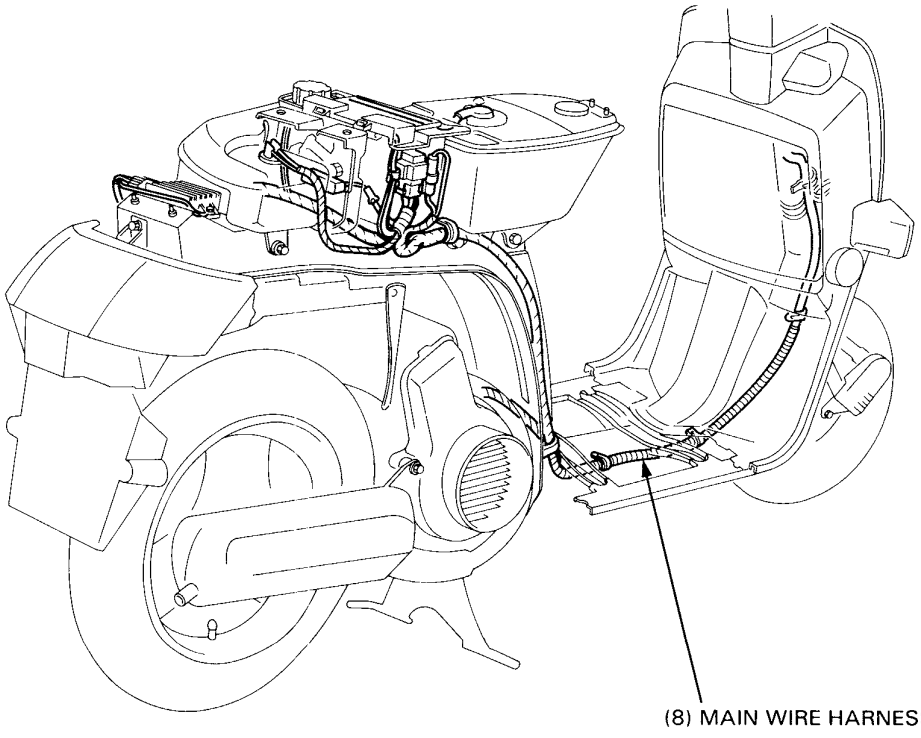
(8) MAIN WIRE HARNESS

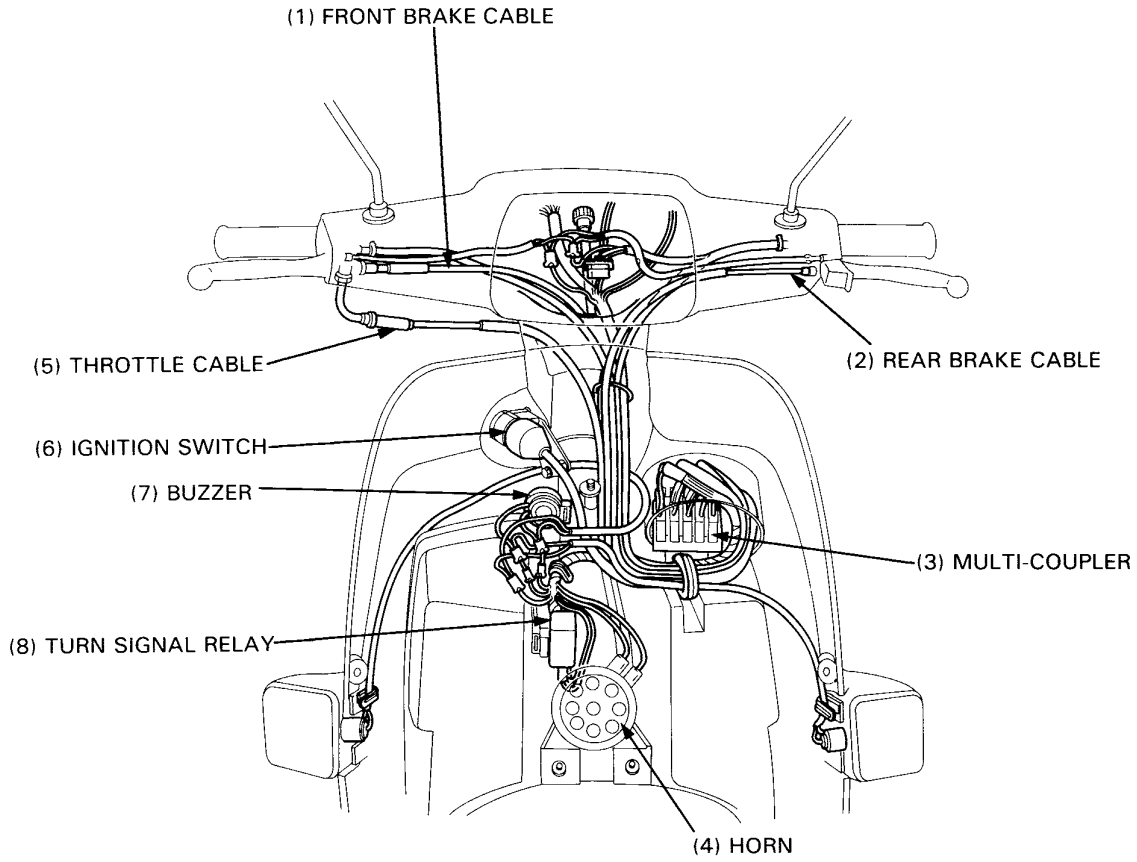
(1) FRONT BRAKE CABLE
(5) THROTTLE CABLE
(2) REAR BRAKE CABLE
(6) IGNITION SWITCH
(7) BUZZER
(3) MULTI-COUPLER
(8) TURN SIGNAL RELAY
(4) HORN

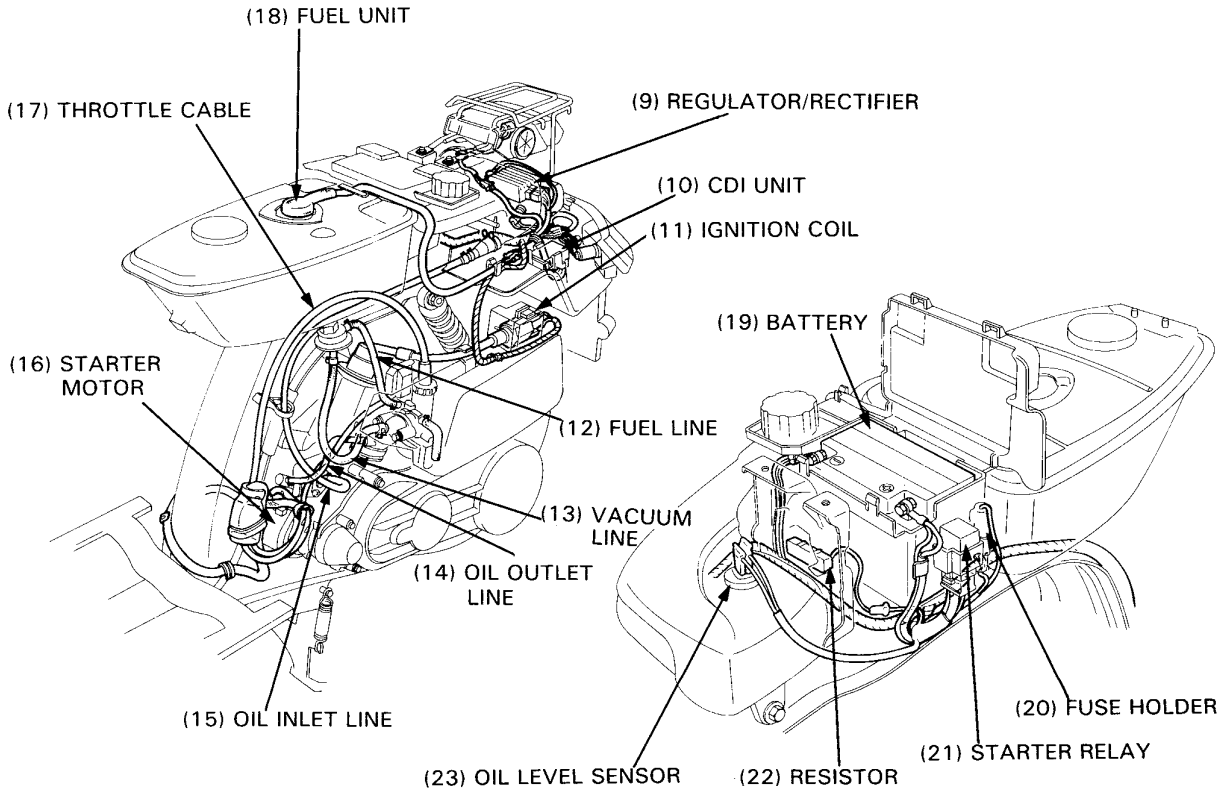
(18) FUEL UNIT
(17) THROTTLE CABLE
(9) REGULATOR/RECTIFIER
(10) CDI UNIT
(11) IGNITION COIL
(19) BATTERY
(16) STARTER MOTOR
(12) FUEL LINE
(13) VACUUM LINE
(14) OIL OUTLET LINE
(15) OIL INLET LINE
(20) FUSE HOLDER
(21) STARTER RELAY
(23) OIL LEVEL SENSOR
(22) RESISTOR

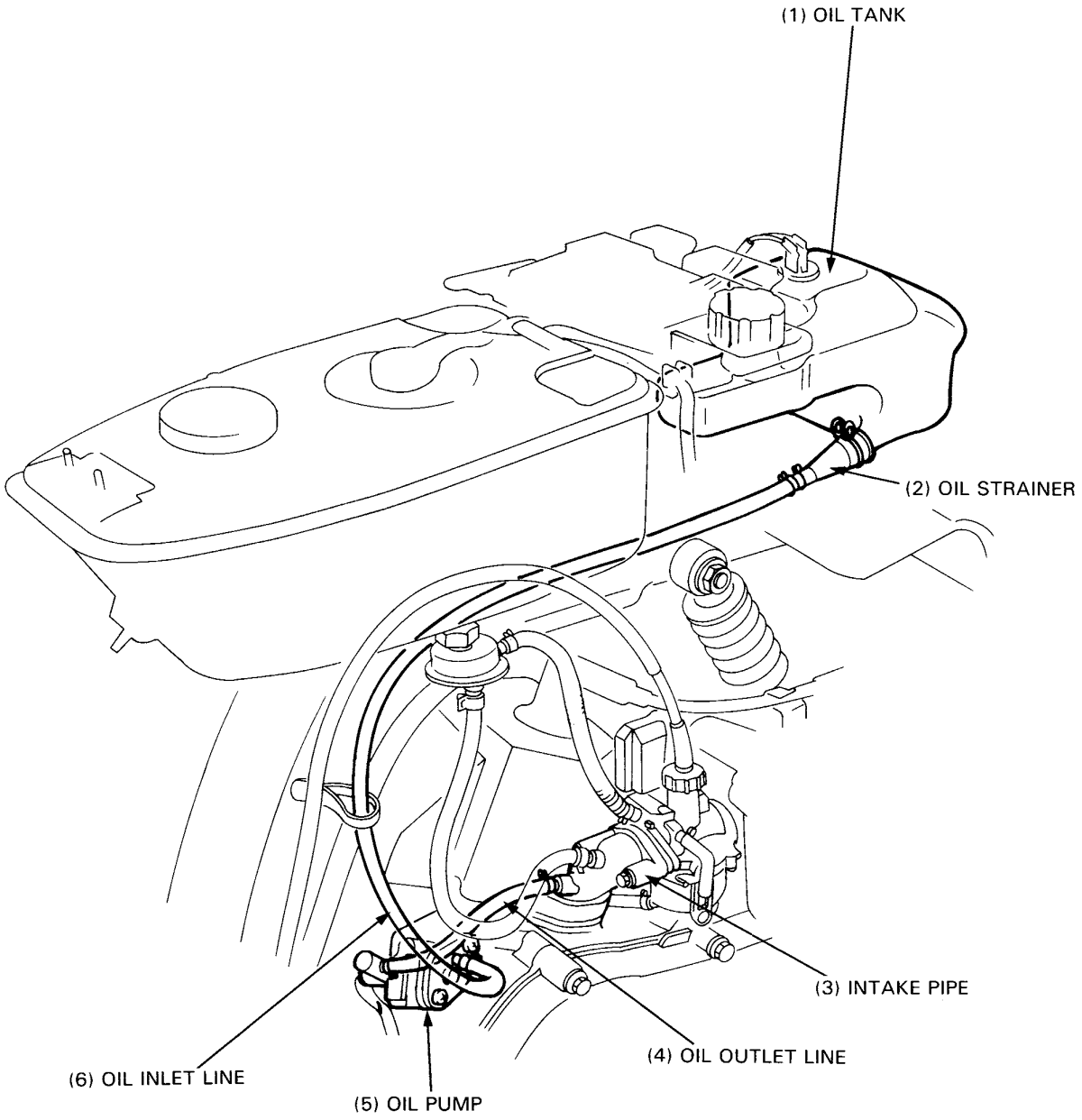
(1) OIL TANK
(2) OIL STRAINER
(3) INTAKE PIPE
(4) OIL OUTLET LINE
(5) OIL PUMP
(6) OIL INLET LINE

2. LUBRICATION

SERVICE INFORMATION	2-1	OIL STRAINER	2-3
TROUBLESHOOTING	2-1	OIL TANK	2-4
OIL PUMP	2-2	LUBRICATION POINTS	2-5
OIL LINES/PUMP BLEEDING	2-3		

SERVICE INFORMATION

GENERAL

- When removing and installing the oil pump use care not to allow dust or dirt to enter the engine and oil line.
- Do not attempt to disassemble the oil pump.
- Bleed air from the oil pump if there is air in the oil inlet line (from the oil tank to the oil pump) or whenever the oil line has been disconnected.
- Bleed air from the oil outlet line (from the oil pump to the carburetor) whenever the line has been disconnected (page 2-3).
- Use HONDA 2-stroke injector oil or equivalent.

TROUBLESHOOTING

Excessive smoke and/or carbon on spark plug
- Faulty oil pump
- Low quality engine oil

Overheating
- Faulty oil pump
- Low quality oil

Seized piston
- No oil in tank or clogged oil line
- Air in oil lines
- Faulty oil pump
- Clogged oil strainer

Oil not flowing out of tank
- Clogged oil tank cap breather hole
- Clogged oil strainer

OIL PUMP

REMOVAL

Remove both frame rear covers (page 11-2).

NOTE

- Before removing the oil pump, clean the oil pump and crankcase.

Clamp the oil line so oil does not flow out and disconnect the oil lines from the oil pump.
Remove the oil pump set plate attaching bolt and remove the oil pump.

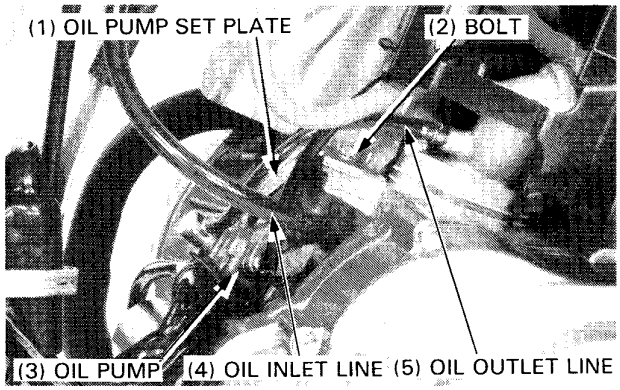

INSPECTION

Inspect for the following item:

- Damage to crankcase mating surface
- Damage to pump body
- Worn or damaged pump gears
- Oil leaks

CAUTION

- *Do not disassemble the oil pump.*

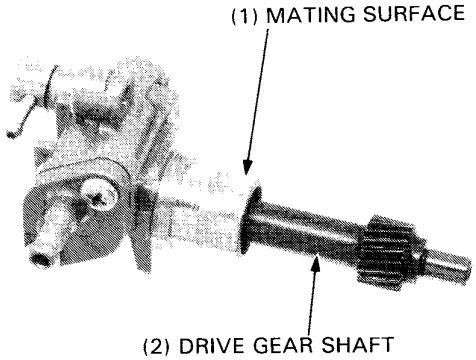

INSTALLATION

Lubricate a new O-ring and install it in the crankcase.
Lubricate the oil pump gear and install the pump.

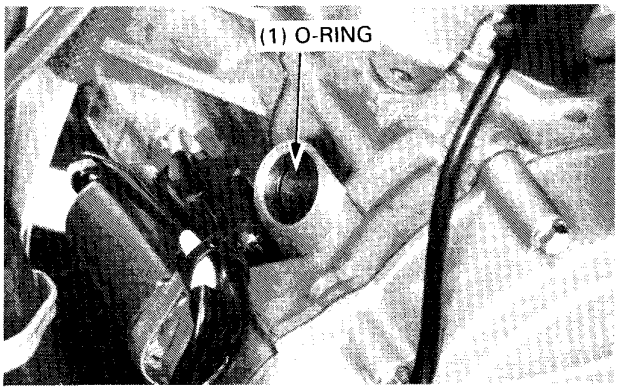

Be sure the pump is properly seated, then install the pump set plate and tighten the attaching bolt securely.
Reconnect the oil inlet and outlet lines.
After installation, bleed the oil pump (page 2-3) and check for leaks.

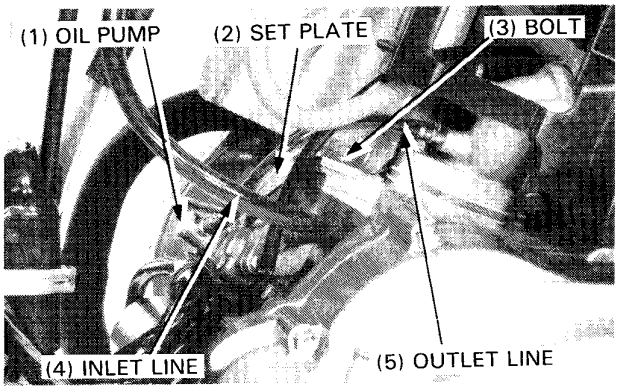

OIL LINES/PUMP BLEEDING

CAUTION

- *Air in the oil system will block or restrict oil flow and may result in severe engine damage.*
- *Bleed air from the oil lines whenever the oil lines or pump have been removed or there is air in the oil lines.*
- *Bleed air from the oil inlet line first, then bleed air from the oil outlet line.*

OIL INLET LINE/OIL PUMP

Fill the oil tank with the recommended oil (page 2-1).
Place a shop towel around the oil pump.
Disconnect the oil inlet line from the pump, and the outlet line from the carburetor intake pipe.
Let oil drip from the inlet line to expel any air that may be in the line.

OUTLET LINE

Force oil through the outlet line and pump with a squirt can until oil flows without air bubbles from the pump's inlet joint.
Connect the inlet line to the oil pump. Make sure that there are no air bubbles in the inlet line. If there is, disconnect the line to let oil drip from it and to expel the air.
Connect the outlet line to the intake pipe. Do not spill any oil from the line.
Start the engine and allow it to idle, checking that no air bubbles flow from the pump to the intake pipe. If there are bubbles in the system, repeat the bleeding procedures above.

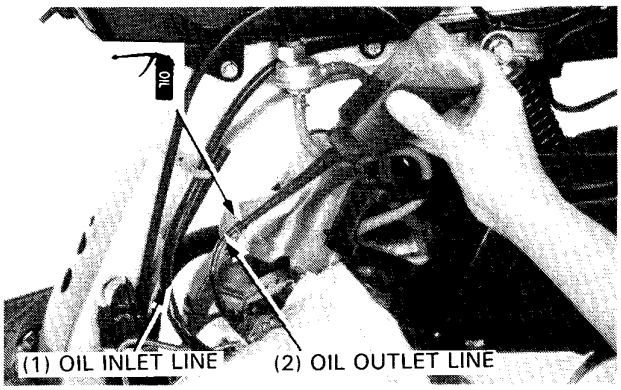

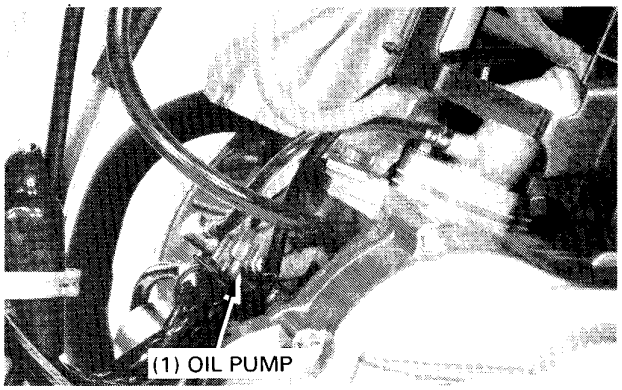

OIL STRAINER

Remove both frame rear covers (page 11-2).
Disconnect the oil inlet line at the oil pump and allow the oil to drain into a clean container.
Loosen the tube clip and disconnect the oil tube joint under the oil tank.
Remove the oil strainer.

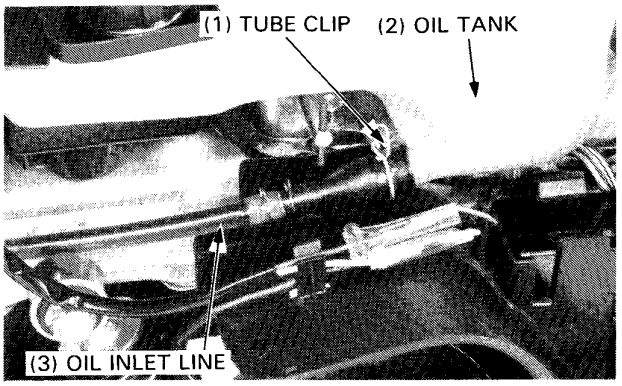

Clean the oil strainer with compressed air.
Installation of the oil strainer is the reverse of removal.
Fill the oil tank with the recommended oil up to the proper level.
Bleed air from the oil pump and oil lines.
Connect the oil lines securely and check for leaks.

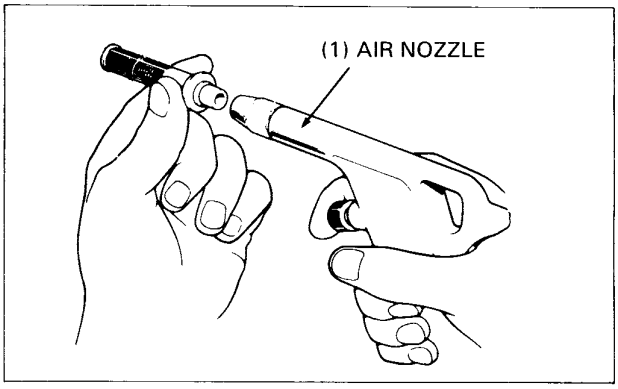

OIL TANK

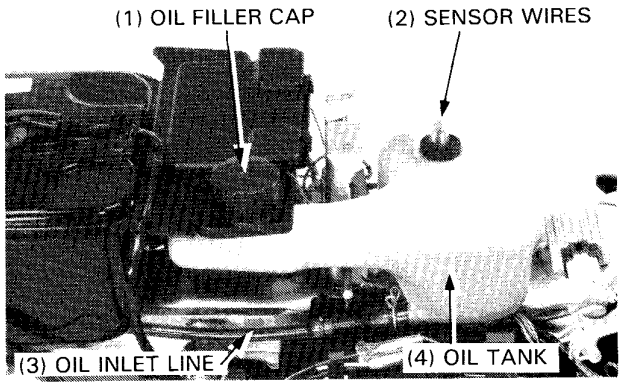

REMOVAL

Remove both frame rear covers (page 11-2).
Disconnect the oil level sensor wires from the oil level sensor.
Remove the oil filler cap.
Disconnect the oil inlet line at the oil pump and allow oil to drain into a clean container.
Remove the oil tank attaching bolt and remove the oil tank.

Clean the interior of the oil tank thoroughly.
Clean the oil strainer (page 2-3).

INSTALLATION

Install the oil tank in the reverse order of removal.
Refill the oil tank up to the proper level and check for oil leaks.
Bleed the oil lines (page 2-3).

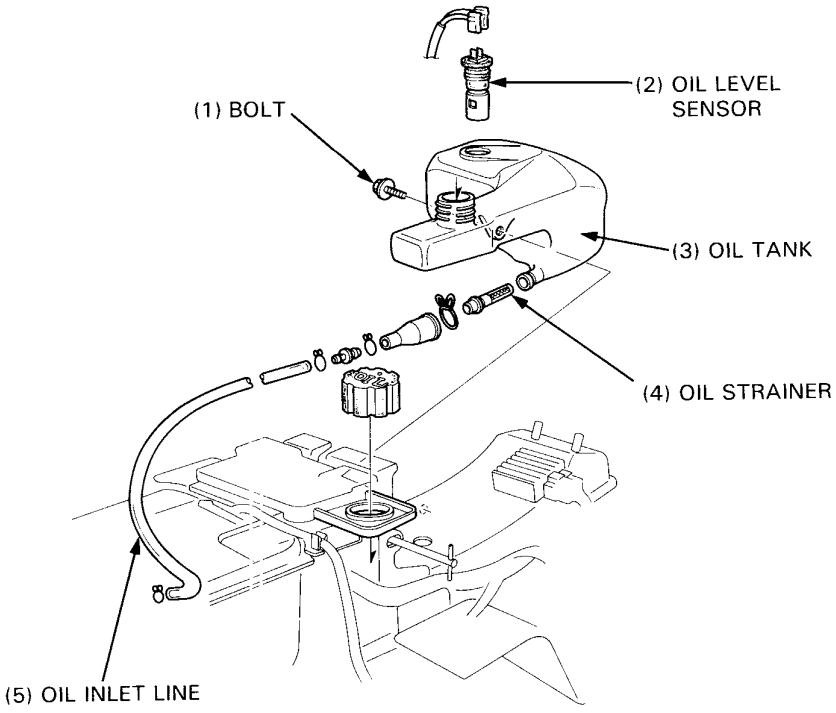

LUBRICATION POINTS

ENGINE

LUBRICATION POINTS	LUBRICANT	REMARKS
Piston/crankshaft	Honda 2-stroke injector oil or equivalent	
Final reduction	Honda 4-stroke oil SAE 10W–40 or equivalent	90cc (3.0 US oz., 2.5 Imp.oz.)
Movable drive face	Lithium Based Grease Mitsubishi HD-3 Nippon Sekiyu Lipanox Deluxe 3 Idemitsu Coronex 3 or equivalent	 10–15g (0.35–0.53 oz.)
Starter gear	General purpose grease	

FRAME

Apply clean engine oil or grease to cables and parts not called out.

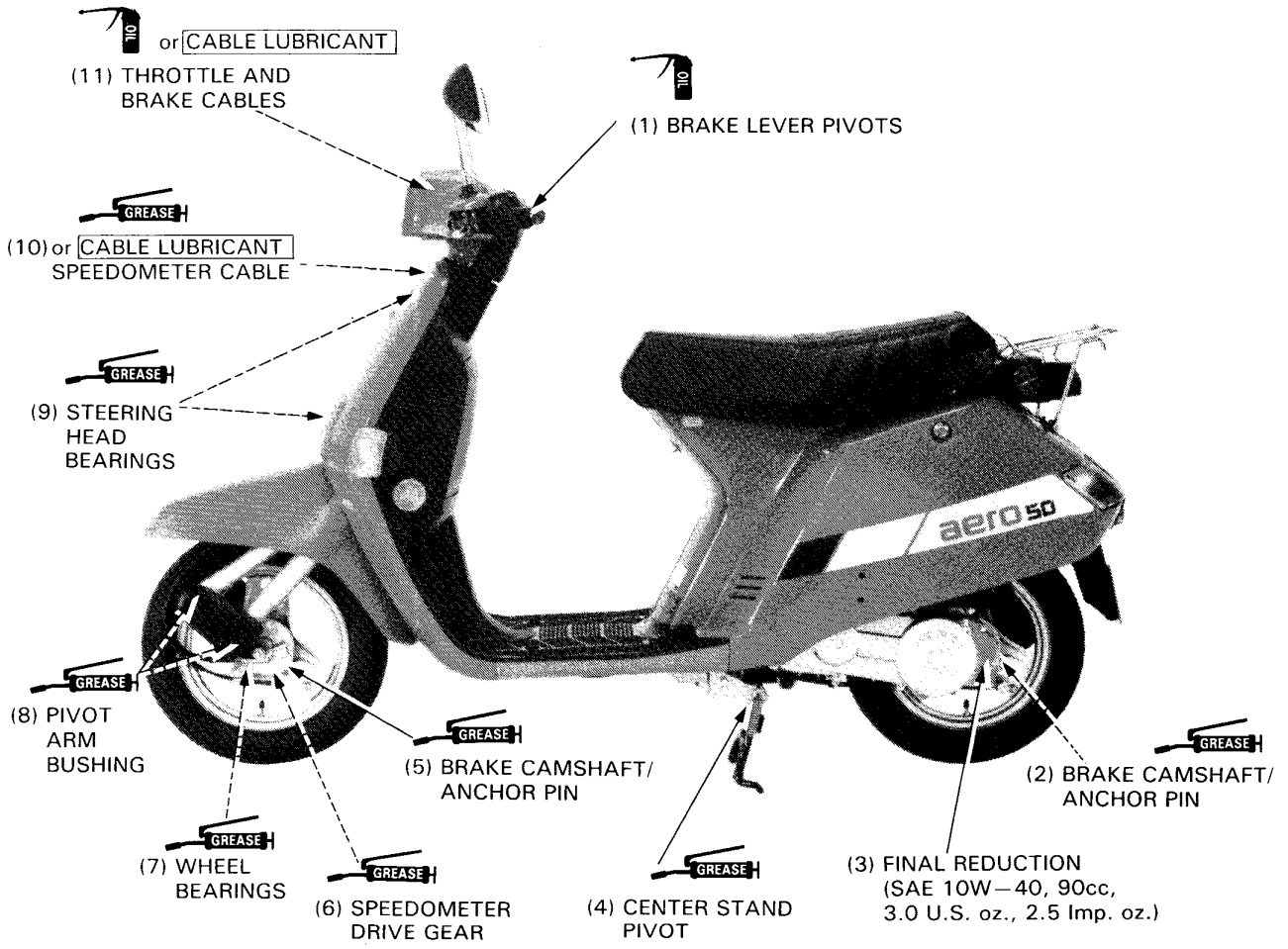

3. MAINTENANCE

SERVICE INFORMATION	3-1	BRAKE FREE PLAY	3-5
MAINTENANCE SCHEDULE	3-2	STEERING HEAD BEARINGS	3-6
AIR CLEANER ELEMENT	3-3	SUSPENSION OPERATION	3-6
CARBURETOR	3-3	NUTS, BOLTS	3-7
THROTTLE OPERATION	3-4	SPARK PLUG	3-7
FUEL LINE	3-4	LIGHTS AND HORN	3-7
TRANSMISSION CASE	3-4	COMPRESSION TEST	3-8
TIRES	3-5		

SERVICE INFORMATION

Spark plug

	NGK	ND
Standard	BPR6HSA BPR6HS	W20FPR-L W20FPR
For cold climate	BPR4HSA BPR4HS	W14FPR-L
For extended high speed riding	BPR8HSA BPR8HS	W24FPR-L W24FPR

Spark plug gap		0.6—0.7 mm (0.024—0.028 in)
Compression		800—1,200 kPa (8.0—12.0 kg/cm², 114—171 psi)
Throttle free play		2—6 mm (1/8—1/4 in)
Idle speed		1,800 ± 100 min^{-1} (rpm)
Brake lever free play		
	Front	10—20 mm (0.40—0.80 in)
	Rear	10—20 mm (0.40—0.80 in)
Tire size	Front	2.75—10—4PR
	Rear	2.75—10—4PR
Tire pressure	Front	150 kPa (1.5 kg/cm², 21 psi)
	Rear	200 kPa (2.0 kg/cm², 28 psi)

MAINTENANCE SCHEDULE

I — Inspection and clean, adjust, lubricate or replace if necessary R — Replace C — Clean

This maintenance schedule is based upon average riding conditions. Scooters subjected to severe use, or ridden in unusually dusty areas require more frequent servicing.	PRE-RIDE INSPECTION	INITIAL SAFETY INSPECTION	REGULAR SERVICE PERIOD Perform at every indicated month or mileage interval whichever occurs first		Refer to page
		600 miles (1,000 km)	1,000 miles (1,500 km)	2,000 miles (3,000 km)	
AIR CLEANER ELEMENT			(EVERY 6 MONTHS) C		3-3
CARBURETOR		I	I	I	3-3
*THROTTLE OPERATION	I		I	I	3-4
OIL PUMP			I	I	2-2
FUEL LINE			I	I	3-4
*OIL AND FUEL LEVELS	I				——
DECARBONIZE CYLINDER HEAD, CYLINDER, PISTON AND MUFFLER				C	6-3,5
*TRANSMISSION CASE FOR LEAK	I				3-4
CLUTCH SHOE WEAR				I	8-7
TIRES: PRESSURES AND CONDITION	I				3-5
WHEEL TRUENESS			I	I	12-5,13-2
*BRAKE OPERATION AND FREE PLAY	I	I	I	I	3-5
BRAKE LININGS			I	I	3-5
STEERING HEAD BEARINGS		I		I	3-6
SUSPENSION OPERATION			I	I	3-6
NUTS, BOLTS (TIGHTEN)		I		I	3-7
*SPARK PLUG			R	R	3-7
ALL LIGHTS AND HORN	I				3-7

Items marked *are simple to perform and may be serviced by the owner. Other maintenance items should be serviced by an authorized Honda dealer.

AIR CLEANER ELEMENT

Remove the left frame rear cover (page 11-2).
Remove the four air cleaner case cover attaching screws and remove the air cleaner case cover.

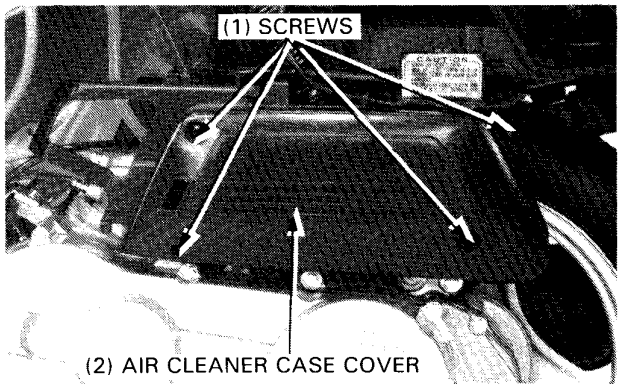

Remove the air cleaner element.

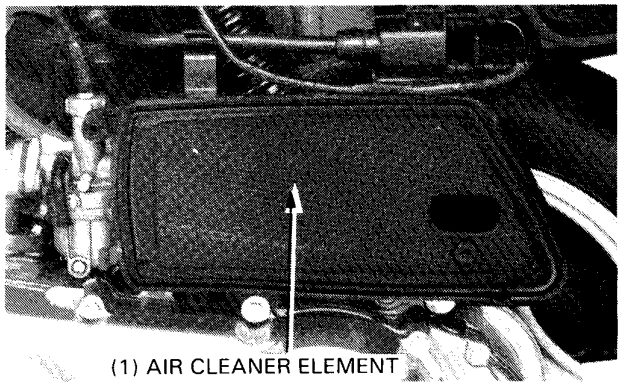

Wash the element in non-flammable or high flash point solvent, squeeze out and allow to dry.

WARNING

- ***Never use the gasoline or low flash point solvents for cleaning the air cleaner element. A fire or explosion could result.***

Soak the element in clean motor oil (SAE 10W—40) or gear oil (#80—90) and squeeze out excess.
Reinstall the element, and the air cleaner case cover.

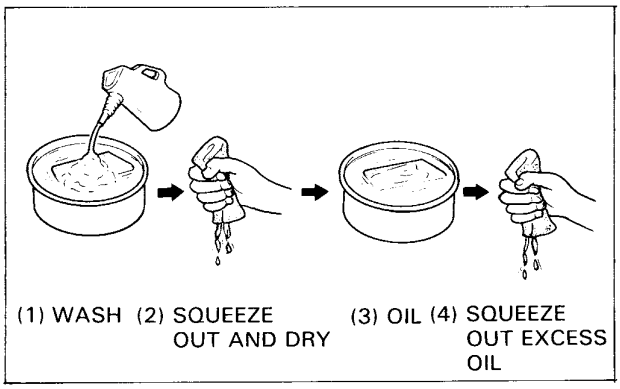

CARBURETOR

IDLE SPEED ADJUSTMENT

Place the scooter on level ground.
Warm up the engine and attach an engine tachometer.
Adjust the idle speed with the throttle stop screw.

IDLE SPEED: 1,800 ± 100 min^{-1} (rpm)

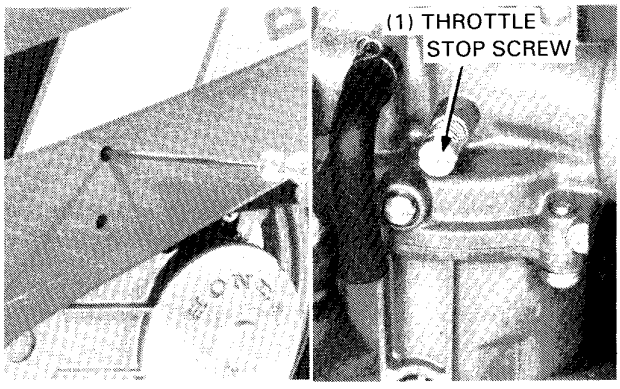

THROTTLE OPERATION

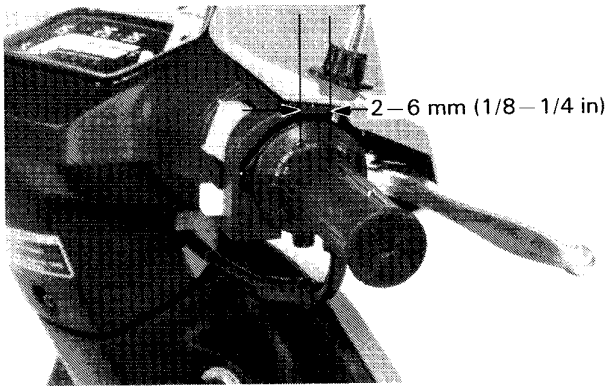

Check for smooth throttle grip full opening and automatic full closing in all steering positions.
Make sure there is no deterioration, damage or kinking in the throttle cable.
Replace any damaged parts.
Remove the right handlebar switch housing.
Disconnect the throttle cable upper end.
Thoroughly lubricate the cable with a commercially available cable lubricant or grease.
Install the throttle cable in the reverse order of removal.
Measure the throttle grip free play at the throttle grip flange.

FREE PLAY: 2—6 mm (1/8—1/4 in)

Adjustments can be made by loosening the lock nut and turning the adjuster.

Replace the throttle cable when the above procedure is no longer effective.

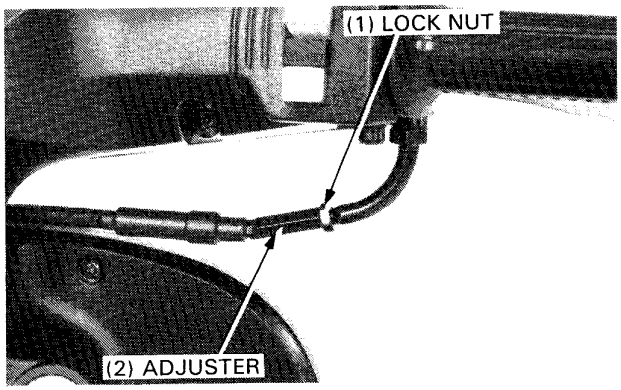

FUEL LINE

Inspect the fuel line for damage or deterioration.
Check that the fuel line is intact and has clamps at each connection.
Replace any parts that are damaged, leaking or show signs of deterioration.

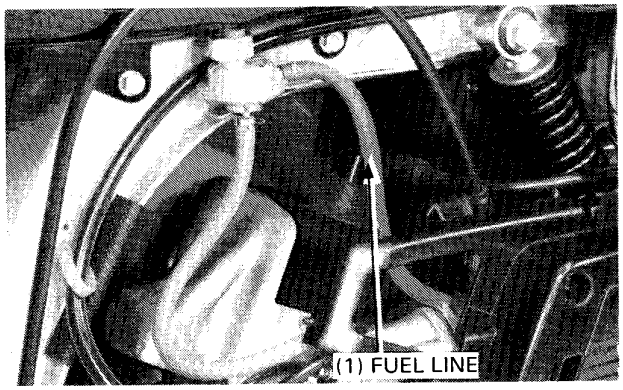

TRANSMISSION CASE

NOTE

- Place the scooter on level ground and support it with the center stand.

Start the engine and let it idle for a few minutes.
Stop the engine, remove the oil level check bolt and check that the oil level is at the bottom edge of the oil level check bolt hole.

Check the transmission case for oil leakage.

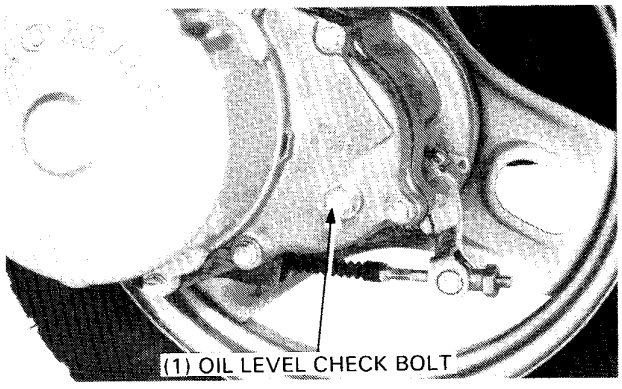

TIRES

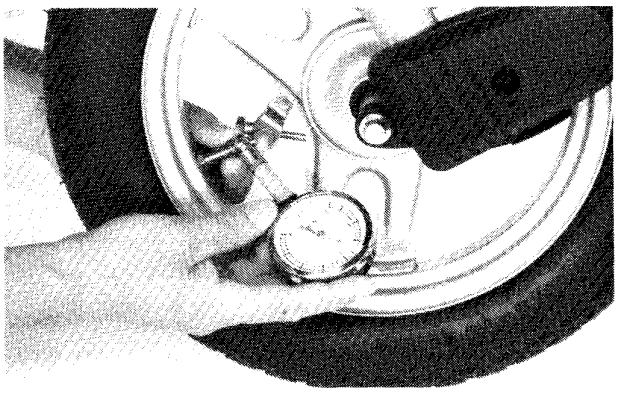

Check the tire pressures when the tires are COLD.

TIRE PRESSURES:
FRONT: 150 kPa (1.5 kg/cm², 21 psi)
REAR: 200 kPa (2.0 kg/cm², 28 psi)

TIRE SIZES:
FRONT: 2.75–10–4 PR
REAR: 2.75–10–4 PR

Check the tires for wear, damage or imbedded objects.

BRAKE FREE PLAY

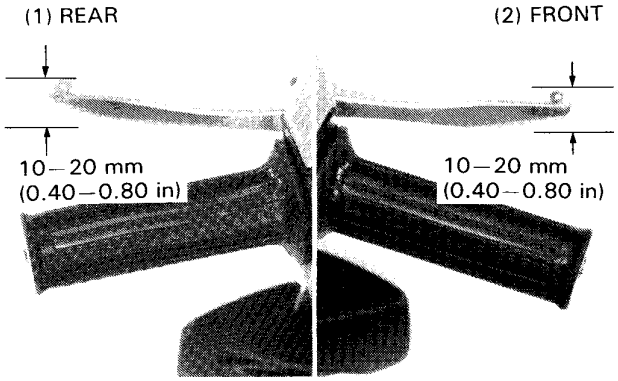

Measure the front and rear brake lever free play at the end of the levers.

FREE PLAY:
FRONT: 10–20 mm (0.40–0.80 in)
REAR: 10–20 mm (0.40–0.80 in)

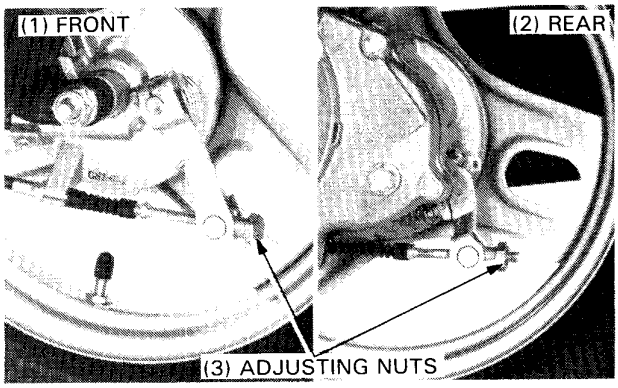

If adjustment is necessary, turn the brake adjusting nut.

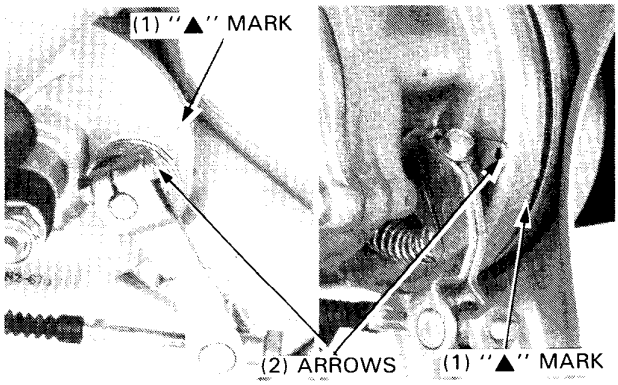

Replace the brake shoes if the arrow on the brake arm aligns with the reference mark "▲" on full application of the front or rear brake (pages 12-8, 13-3).

STEERING HEAD BEARINGS

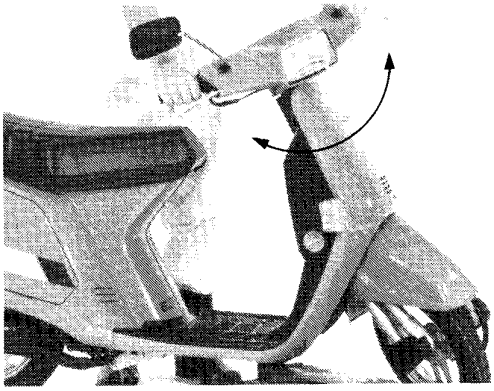

NOTE

- Check that the control cables do not interfere with the handlebar rotation.

Place the scooter on the center stand.
Raise the front wheel off the ground by placing a support under the frame.
Check that the handlebar rotates freely.
If the handlebar moves unevenly, binds, or has vertical movement, adjust the steering head bearing by turning the steering head adjusting nut (page 12-15).

SUSPENSION OPERATION

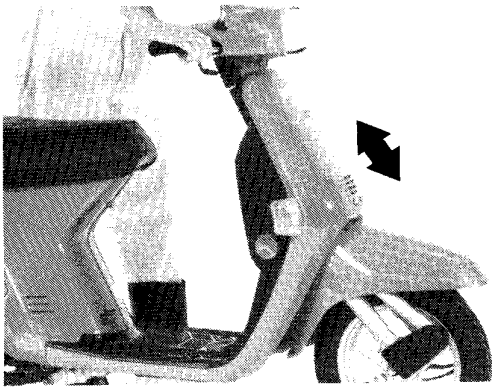

FRONT

Check the action of the front forks by compressing them several times.
Check the entire fork assembly for signs of damage.
Replace any components which cannot be repaired.
Tighten all nuts and bolts to the specified torque values (page 1-5).

REAR

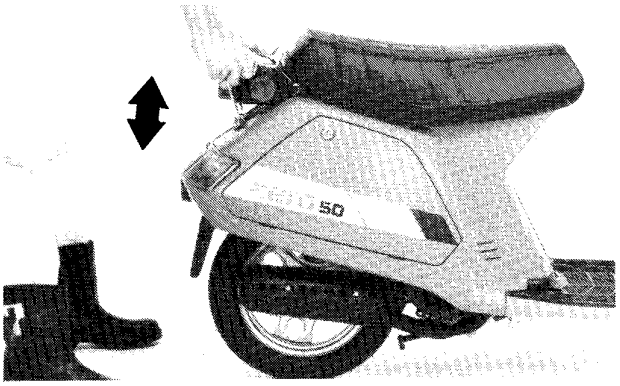

Check the operation of the shock absorber by pressing down on the end of the frame several times.

Place the scooter on the center stand.
Hold the rear carrier with one hand and move the left crankcase sideways with force to see if the swing arm bushings are worn.
Replace if excessively worn.
Check the entire suspension assembly.
Be sure it is securely mounted and not damaged.
Tighten all nuts and bolts to the specified torque value (page 1-5).

NUTS, BOLTS

Tighten bolts, nuts and fasteners at the regular intervals shown in the Maintenance Schedule (page 3-2).

Check that all chassis nuts and bolts are tightened to their correct torque values (page 1-5).
Check that all cotter pins and safety clips are in place.

SPARK PLUG

RECOMMENDED SPARK PLUGS:

	NGK	ND
Standard	BPR6HSA BPR6HS	W20FPR-L W20FPR
For cold climate	BPR4HSA BPR4HS	W14FPR-L
For extended high speed riding	BPR8HSA BPR8HS	W24FPR-L W24FPR

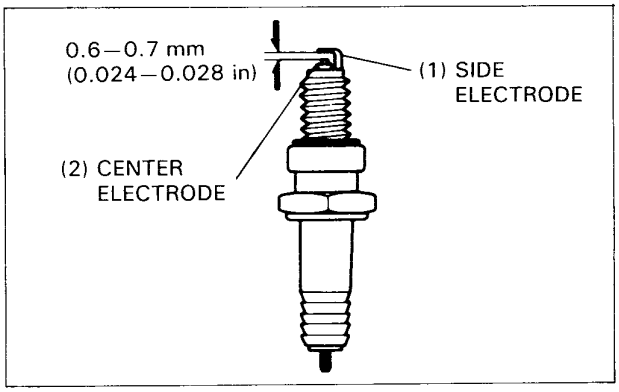

Disconnect the spark plug cap and clean any dirt from around the spark plug base.

Remove and discard the spark plug.

Measure the new spark plug gap using a wire-type feeler gauge.

SPARK PLUG GAP: 0.6–0.7 mm (0.024–0.028 in)

Adjust the gap by bending the side electrode carefully.
With the plug washer attached, thread the spark plug in by hand to prevent crossthreading. Tighten the spark plug another 1/2 turn with a spark plug wrench to compress the plug washer. Then connect the spark plug cap.

LIGHTS AND HORN

Place the scooter on level ground and support it with the center stand.
Start the engine and allow it to idle.
Make sure that the headlight and taillight are on.
Check the operation of the headlight dimmer (Lo-Hi) switch.
Adjust the headlight beam by turning the horizontal adjusting screws.

CAUTION

- *Adjust the headlight beam as specified by local laws and regulations.*

Check the horn by pushing the horn button.

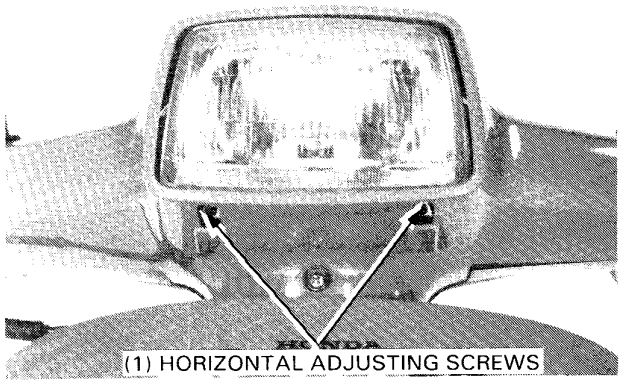

COMPRESSION TEST

Remove the frame rear covers (page 11-2).
Warm up the engine.
Stop the engine and remove the spark plug.
Insert a compression gauge.
Open the throttle grip fully and operate the starter motor several times.

COMPRESSION: 800—1,200 kPa
(8.0—12.0 kg/cm², 114—171 psi)

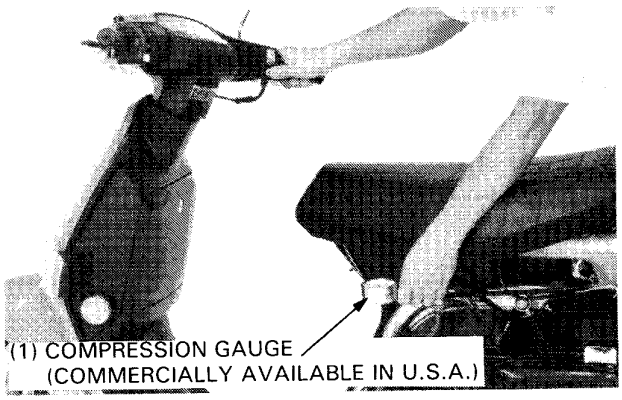
(1) COMPRESSION GAUGE (COMMERCIALLY AVAILABLE IN U.S.A.)

Low compression can be caused by:
- Leaking cylinder head gasket
- Worn piston rings
- Worn cylinder

High compression can be caused by:
- Carbon deposits in combustion chamber or on top of the piston.

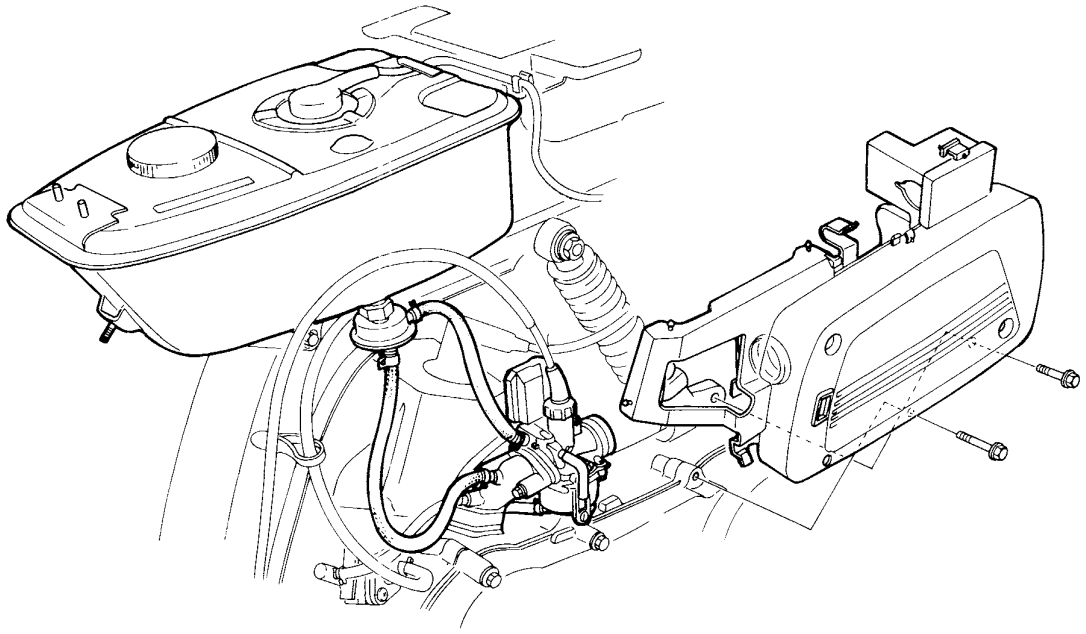

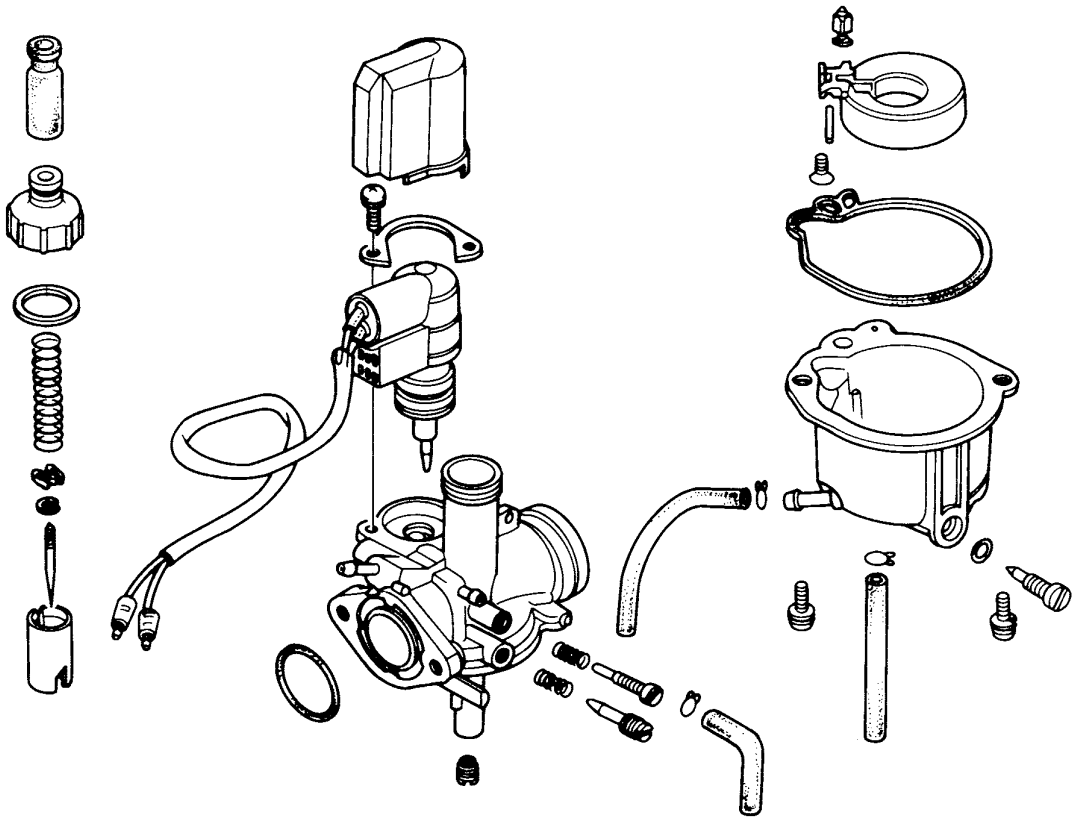

4. FUEL SYSTEM

SERVICE INFORMATION	4-1	CARBURETOR INSTALLATION	4-8
TROUBLESHOOTING	4-2	THROTTLE VALVE INSTALLATION	4-8
THROTTLE VALVE DISASSEMBLY	4-3	REED VALVE	4-9
CARBURETOR REMOVAL	4-4	AIR SCREW ADJUSTMENT	4-10
AUTO BYSTARTER	4-4	AUTO FUEL VALVE INSPECTION/ MAINTENANCE	4-11
FLOAT/FLOAT VALVE/JETS DISASSEMBLY	4-6	FUEL STRAINER CLEANING	4-11
JETS/FLOAT VALVE/FLOAT ASSEMBLY	4-7	FUEL TANK	4-12
FLOAT LEVEL INSPECTION	4-8	AIR CLEANER CASE	4-13

4

SERVICE INFORMATION

GENERAL

- The fuel tank is equipped with an auto fuel valve that is turned OFF automatically when the engine is stopped.
- Use caution when working with gasoline. Always work in a well-ventilated area and away from sparks or flames.
- When disassembling fuel system parts, note the locations of the O-rings. Replace them with new ones during assembly.
- Bleed air from the oil outlet line whenever it is disconnected.

SPECIFICATIONS

Venturi diameter	14 mm (0.55 in)
Identification number	PA04G
Float level	12.2 mm (0.48 in)
Air screw opening	1-1/4 turns out
Idle speed	1,800 ± 100 min^{-1} (rpm)
Throttle grip free play	2–6 mm (1/8–1/4 in)

TORQUE VALUES

Carburetor	9–12 N·m (0.9–1.2 kg-m, 7–9 ft-lb)
Intake pipe	8–12 N·m (0.8–1.2 kg-m, 6–9 ft-lb)

TOOLS

Special

Vacuum pump	A937X–041–XXXXX or ST–AH–260–MC7 (U.S.A. only, included in Turbo kit.)

Common

Float level gauge	07401–0010000

TROUBLESHOOTING

Engine cranks but won't start
- No fuel in tank
- No fuel to carburetor
- Too much fuel getting into cylinder
- No spark at plug (ignition malfunction)
- Air cleaner clogged
- Faulty auto bystarter
- Clogged fuel line
- Clogged fuel strainer
- Stuck fuel valve diaphragm

Engine idles roughly, stalls, or runs poorly
- Idle speed incorrect
- Ignition malfunction
- Low compression
- Rich mixture
- Lean mixture
- Air cleaner clogged
- Air leaking into inlet pipe
- Fuel contaminated

Lean mixture
- Carburetor fuel jets clogged
- Fuel cap vent clogged or blocked
- Fuel strainer clogged
- Fuel line kinked or restricted
- Float valve faulty
- Float level too low
- Air vent tube clogged

Rich mixture
- Disconnected auto bystarter wires
- Faulty float valve
- Float level too high
- Carburetor air jets clogged
- Air cleaner dirty

THROTTLE VALVE DISASSEMBLY

Remove the left frame rear cover (page 11-2).
Remove the air cleaner case by removing the two mounting bolts.

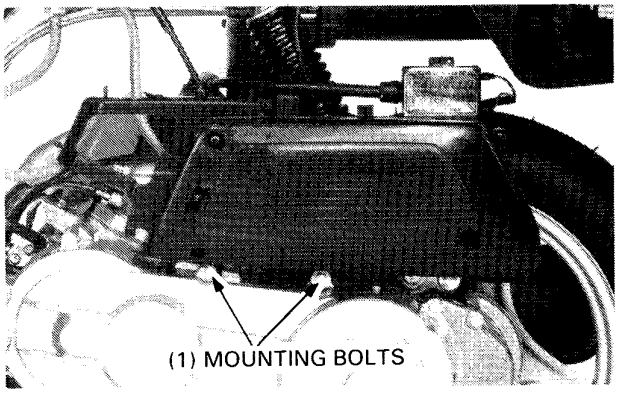

Remove the carburetor cap and pull out the throttle valve.

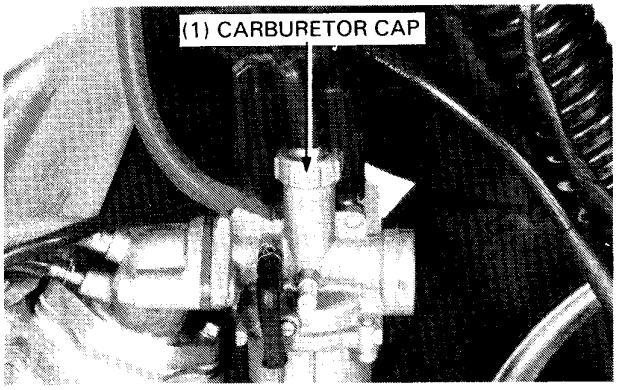

Disconnect the throttle cable from the throttle valve.

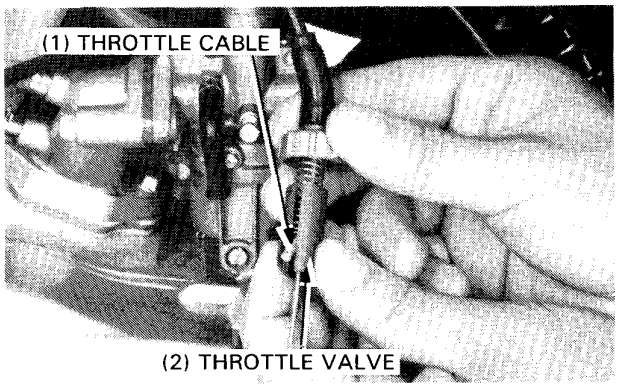

Remove the throttle valve spring, carburetor cap and sealing cap from the throttle cable.

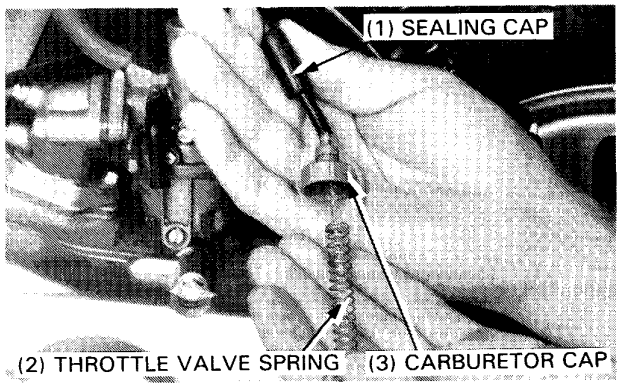

Pry out the retainer and remove the jet needle.
Check the jet needle and throttle valve for wear or damage and replace them if necessary.

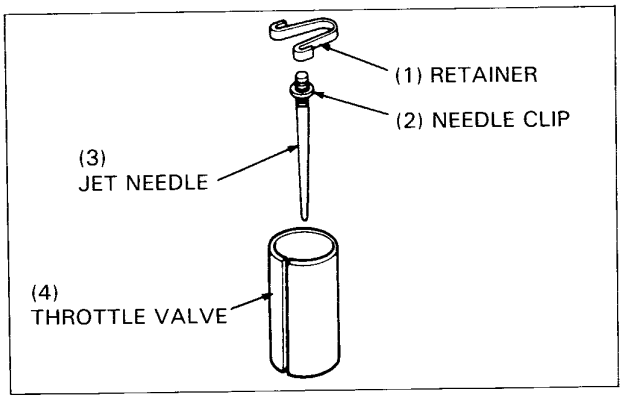

CARBURETOR REMOVAL

Remove the left frame rear cover (page 11-2).
Remove the air cleaner case and disconnect the bystarter wire connectors.

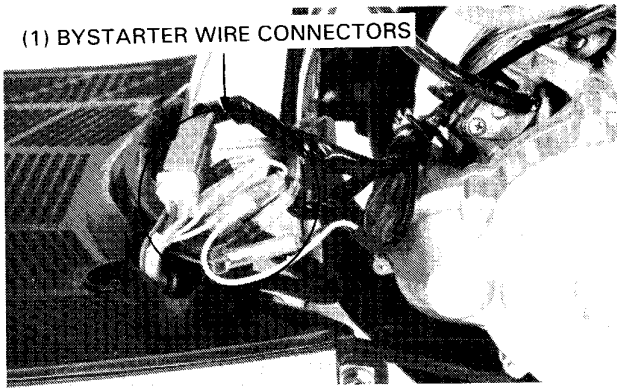

Remove the carburetor cap and pull out the throttle valve.
Disconnect the fuel line from the carburetor body.
Remove the carburetor mounting bolts and remove the carburetor.

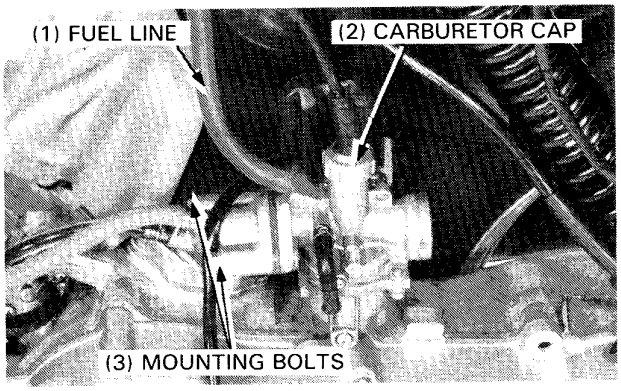

AUTO BYSTARTER

INSPECTION

If the engine has been running, let it cool for 10 minutes or more.
Measure the resistance between the auto bystarter wires. Replace the auto bystarter with a new one if resistance is out of specification or if there is no continuity.

RESISTANCE: 10 Ω max.

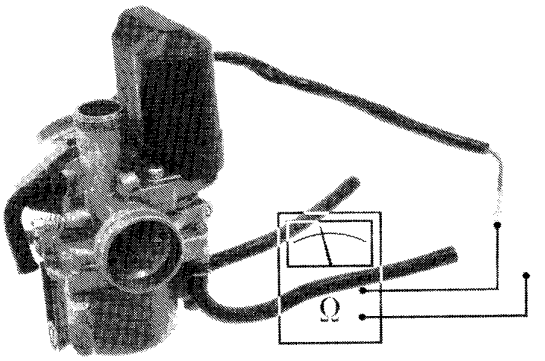

Let the carburetor sit for 30 minutes.
Connect a pressure tester to the enrichening circuit.
Apply pressure to the circuit.

If the passage is blocked, replace the auto bystarter with a new one.

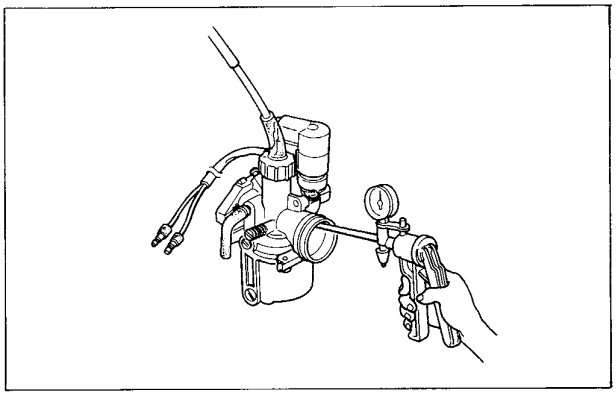

Connect a 12V battery between the auto bystarter wires and wait five minutes.
Connect a pressure tester to the fuel enrichening circuit and apply pressure to it.

Replace the auto bystarter with a new one if there is no restriction to the pressure applied.

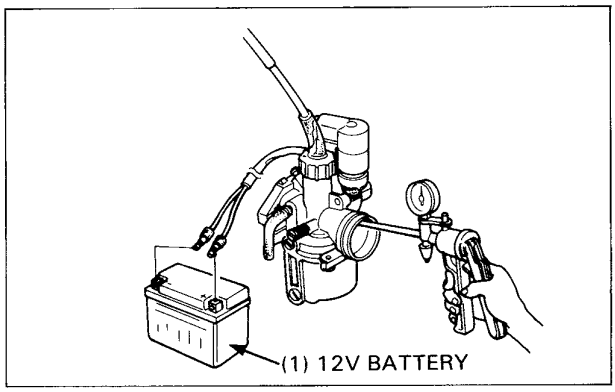

REMOVAL/INSTALLATION

Remove the two screws, set plate and auto bystarter from the carburetor body.

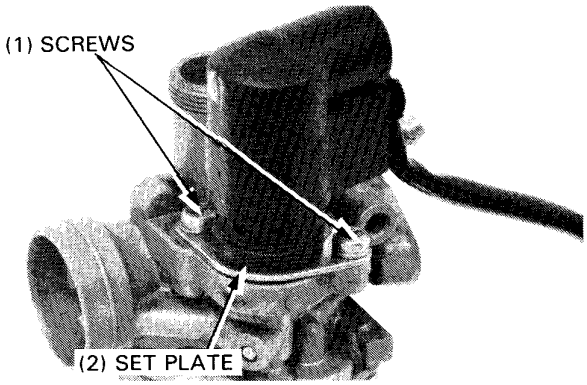

Inspect the auto bystarter valve for wear or damage, and the O-ring for deterioration.

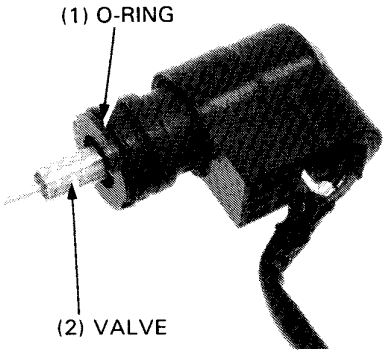

Install the auto bystarter into the carburetor until it is fully seated, and secure it with the set plate and two screws.

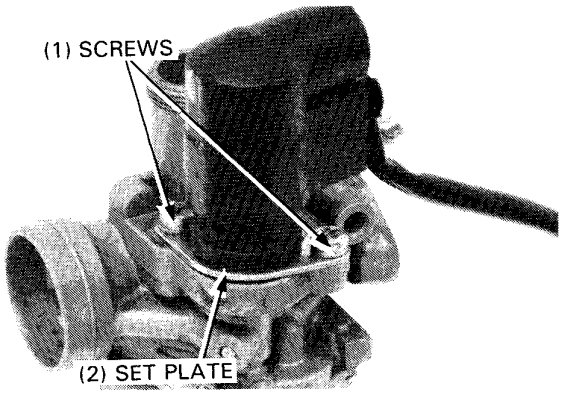

FLOAT/FLOAT VALVE/JETS DISASSEMBLY

Place a drain pan under the carburetor and loosen the carburetor drain screw to allow fuel to drain into the drain pan. Remove the float chamber from the carburetor body.

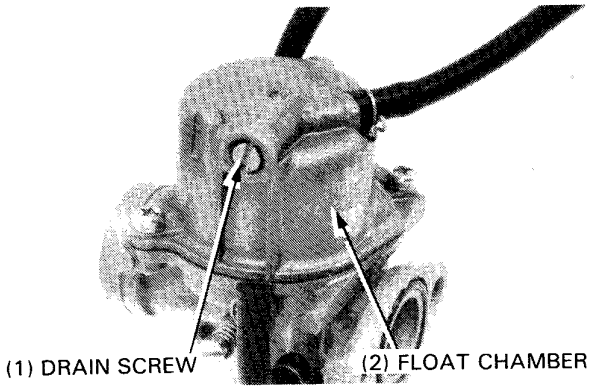

Remove the carburetor float and float valve by removing the attaching screw.

Remove the O-ring from the carburetor body.

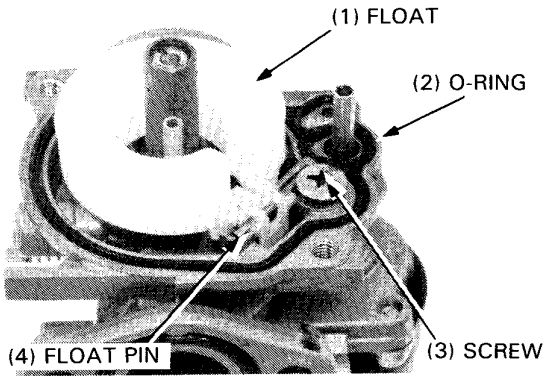

FLOAT/FLOAT VALVE INSPECTION

Check the valve and seat for wear or damage.
Replace the valve and seat as a set if either part is worn or damaged.

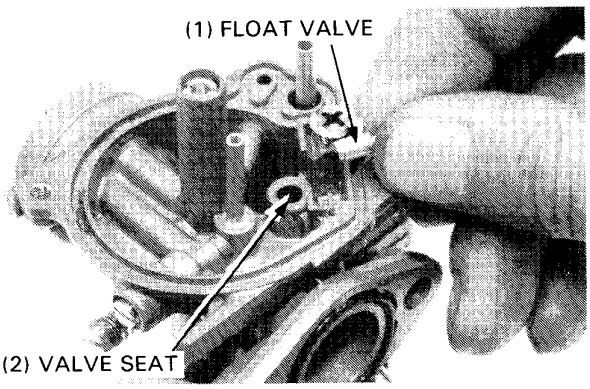

Turn in the throttle stop screw and record the number of furns it takes before it seats lightly.
Repeat this procedure with the air screw.

CAUTION

- *Do not force the screws against their seats to prevent damaging them.*

Remove the throttle stop screw and air screw.
Remove the auto-bystarter set plate and the bystarter by removing the two screws.
Check all parts for wear or damage.

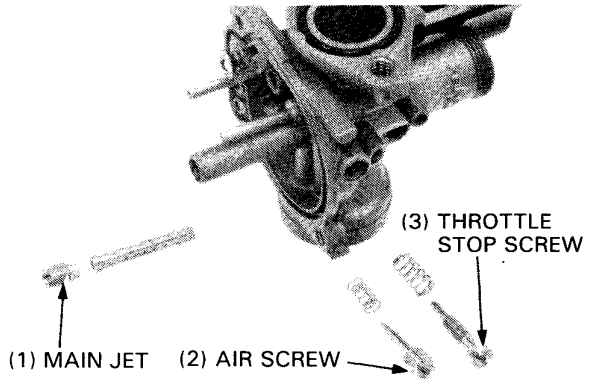

Blow open all jets and body openings with compressed air.

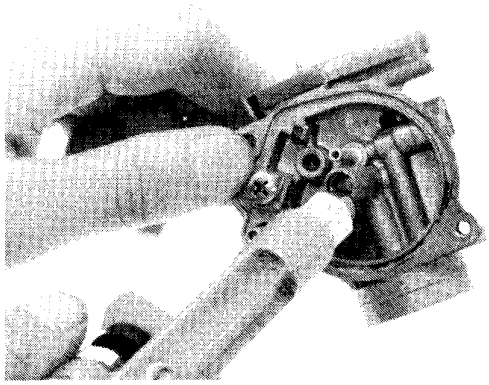

JETS/FLOAT VALVE/FLOAT ASSEMBLY

Install the main jet.
Install the air and throttle stop screws to their original positions recorded during disassembly.

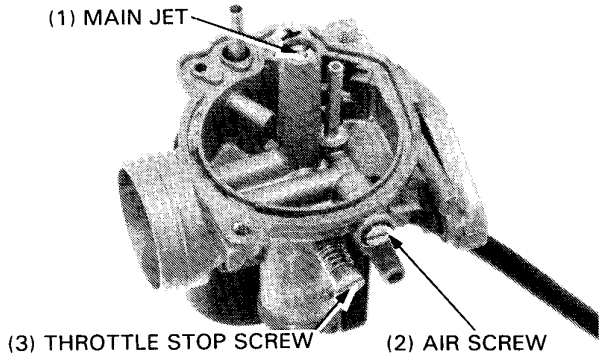

Install the float valve, float and float pin.
Tighten the float screw securely.
Install the O-ring onto the carburetor body groove.

Install the auto bystarter with the set plate and two screws.

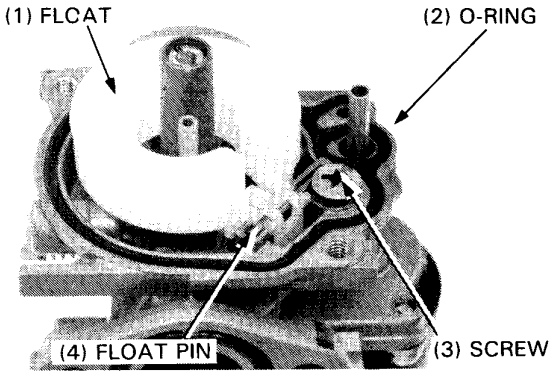

FLOAT LEVEL INSPECTION

Remove the O-ring from the carburetor body.
Measure the float level with the float lip just contacting the float valve.

FLOAT LEVEL: 12.2 mm (0.48 in)

Replace the float if the level is incorrect.
Reinstall the O-ring onto the carburetor body groove.
Check the operation of the float and install the float chamber.

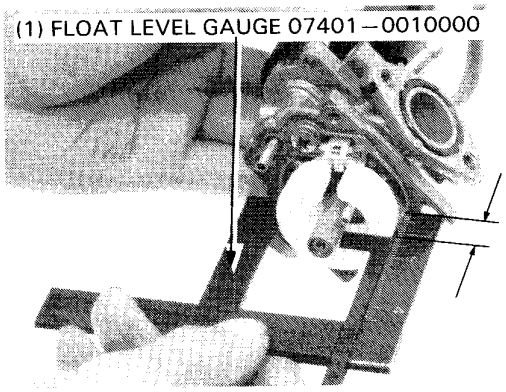

CARBURETOR INSTALLATION

CAUTION

- *Do not allow foreign particles to enter the carburetor.*

Be sure the O-ring is in place on the carburetor. Install the heat insulator and carburetor mounting bolts.

TORQUE: 9—12 N·m (0.9—1.2 kg-m, 7—9 ft-lb)

Install the carburetor cap (page 4-9).

Connect the fuel line and auto bystarter wires.

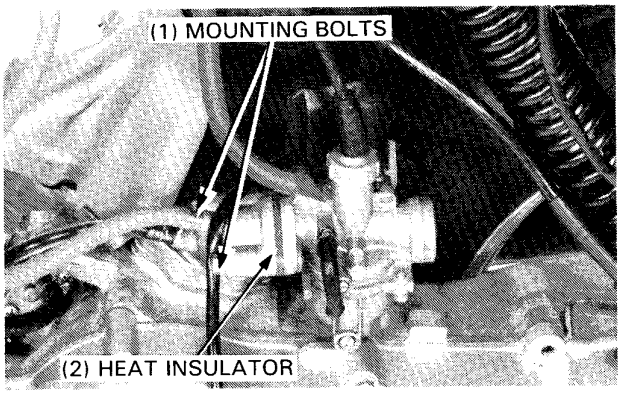

THROTTLE VALVE INSTALLATION

Install the jet needle into the throttle valve and secure with the retainer.

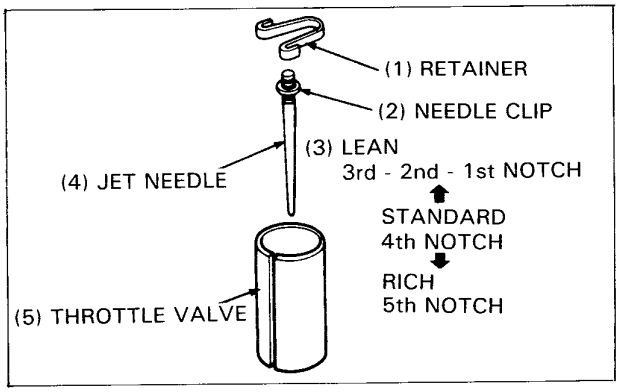

Assemble the throttle cable, carburetor cap, sealing cap and throttle valve spring.

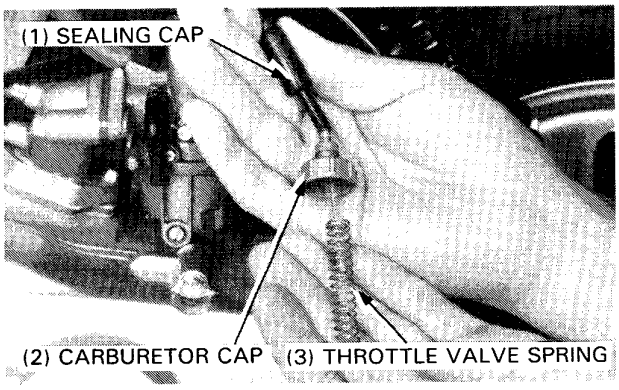

Connect the throttle cable to the throttle valve.

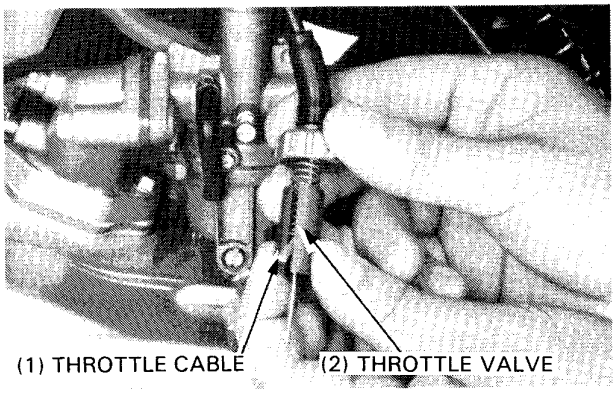

Slide the throttle valve into the carburetor body.

NOTE

- Align the groove in the valve with the throttle stop screw on the carburetor body.

Tighten the carburetor cap.

Perform the following adjustments and operations.
- Throttle cable free play adjustment (page 3-4).
- Oil pump and line bleeding (page 2-3).
- Idle speed adjustment (page 3-3).

Install the left frame rear cover (page 11-2).

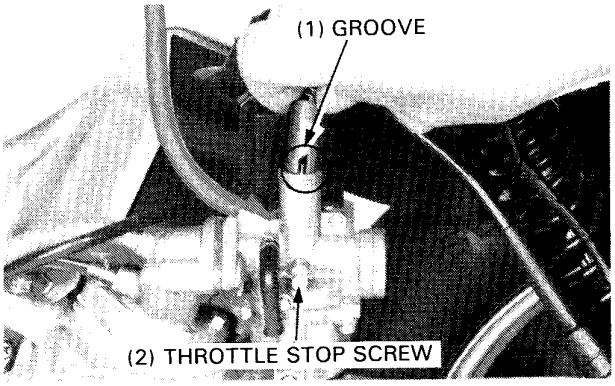

REED VALVE

REMOVAL

Remove the following parts:
- carburetor (page 4-4).
- cylinder head shroud (page 6-2).
- vacuum tube.

Remove the intake pipe by removing two bolts.

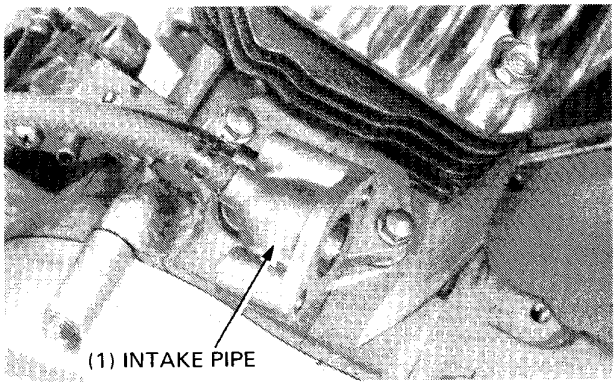

Remove the reed valve.

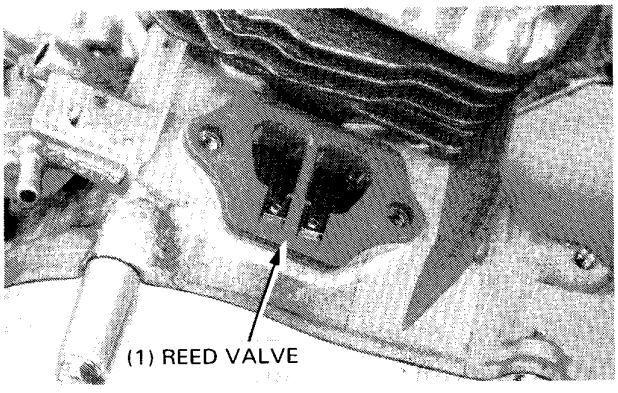

INSPECTION

Check the reed valve for damaged or weak reeds.
Check the valve seat for cracks, damage or clearance between the seat and reed. Replace the valve if necessary.

CAUTION

- *Do not disassemble or bend the reed stopper. To do so can cause loss of power and engine damage. If the stopper, reed or valve seat is faulty, replace them as a unit.*

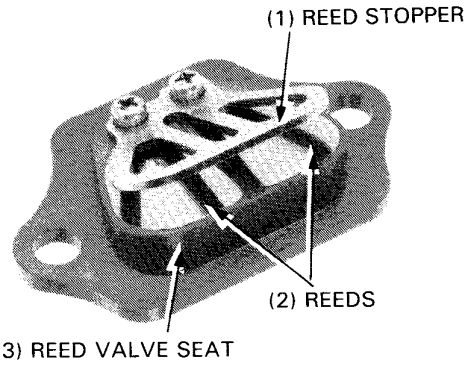

INSTALLATION

The installation sequence is essentially the reverse order of removal.

After installation, check for secondary leaks.

AIR SCREW ADJUSTMENT

NOTE

- The engine must be warm for accurate air screw adjustment.

When the engine misses or runs erratically, proceed as follows:
Screw in the air screw until it lightly seats, then turn it out as specified.

AIR SCREW OPENING: 1-1/4 turns out

CAUTION

- *Damage to the air screw seat will occur if the air screw is tightened against the seat.*

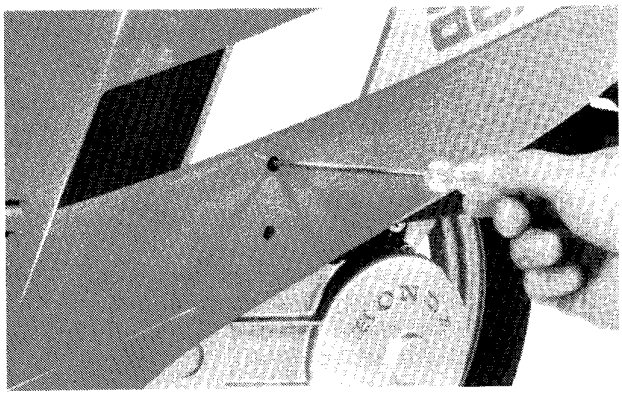

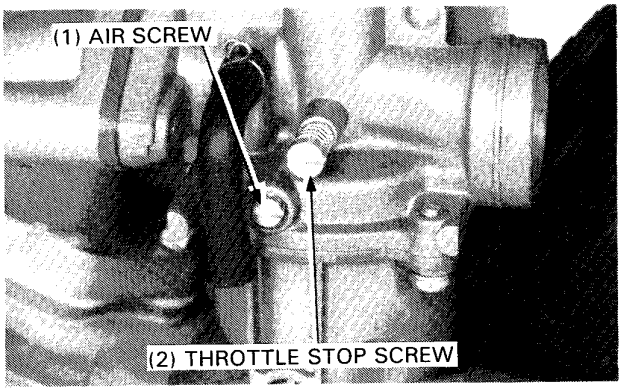

Reset idle speed with the throttle stop screw.

IDLE SPEED: 1,800 ± 100 min^{-1} (rpm)

Make sure that the engine dose not miss or run erratically by lightly snapping the throttle grip.
If necessary, turn the air screw 1/4 turn (maximum) in either direction to find the best performance.
If the engine can not be adjusted within 1/4 turn, refer to Troubleshooting, POOR PERFORMANCE AT LOW AND IDLE SPEEDS (page 16-2).

AUTO FUEL VALVE INSPECTION/MAINTENANCE

WARNING

- *Gasoline is extremely flammable and is explosive under certain conditions.*
  Perform this operation in a well-ventilated area and do not smoke or allow sparks in the area.

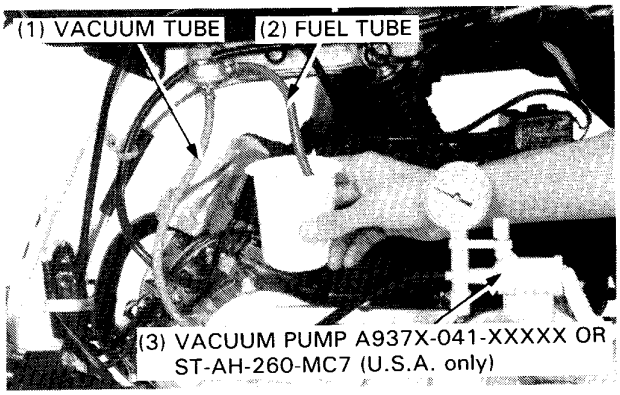

1. Disconnect the fuel line from the carburetor and check if fuel is flowing out of the fuel line.
   The fuel valve is normal if fuel ceases to flow out of the fuel line after the remaining fuel has been drained out of the fuel valve and fuel line. Should fuel continue to flow out of the fuel line, perform the following operation:
   - Clear the vacuum tube of any obstruction.
   - Direct a jet of compressed air to the fuel valve from the top.

2. Disconnect the vacuum tube from the intake pipe and apply vacuum to the vacuum tube.
   The fuel valve is normal if fuel flows out of the fuel line when vacuum is applied.
   If fuel does not flow out of the fuel line when negative pressure is applied: do the following:
   - Clean the vacuum tube with compressed air.
   - Clean the fuel strainer with compressed air.
   - Loosen a stuck diaphragm by directing a jet of compressed air to the fuel valve from the bottom. Hold the air nozzle about 3 inches from the inlet.

FUEL STRAINER CLEANING

WARNING

- *Keep away from flames or sparks. Wipe up spilled gasoline at once.*

Remove the left frame rear cover (page 11-2).
Remove the lock nut and remove the fuel valve.
Drain the gasoline into a suitable container.
Remove the fuel strainer and clean it with compressed air.
Install the fuel valve.

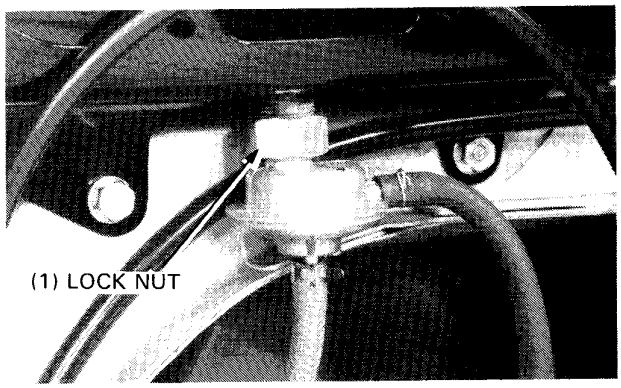

NOTE

- After assembling, refill the fuel tank and check for leaks.
- Do not overtighten the lock nut.

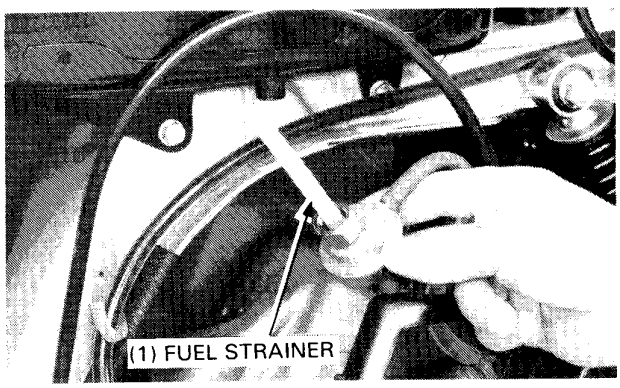

FUEL TANK

REMOVAL

WARNING

- ***Gasoline is extremely flammable and is explosive under certain conditions.***
  Perform this operation in a well-ventilated area and do not smoke or allow sparks in the area.

Remove both frame rear covers (page 11-2).
Remove the seat.
Remove the fuel line and vacuum tube.
Slide the fuel unit cover off and disconnect the unit's slide wire connectors.
Remove the fuel tank mounting bolts and the tank.

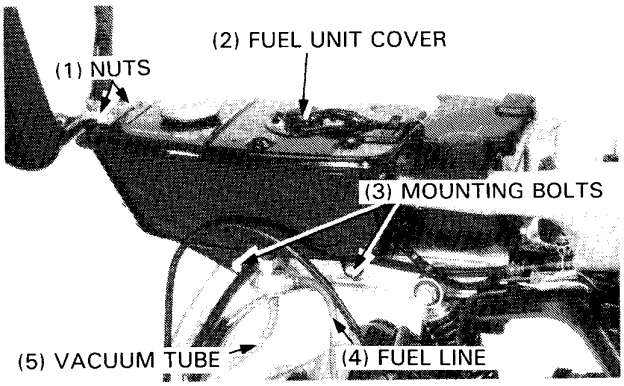

DISASSEMBLY

Drain the fuel.
Remove the fuel unit with slip joint pliers.
Remove the fuel auto valve
Clean the fuel strainer (page 4-11).

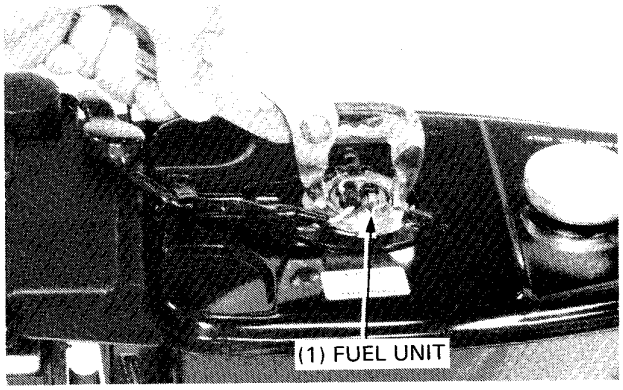

ASSEMBLY

The assembly is the reverse order of disassembly.

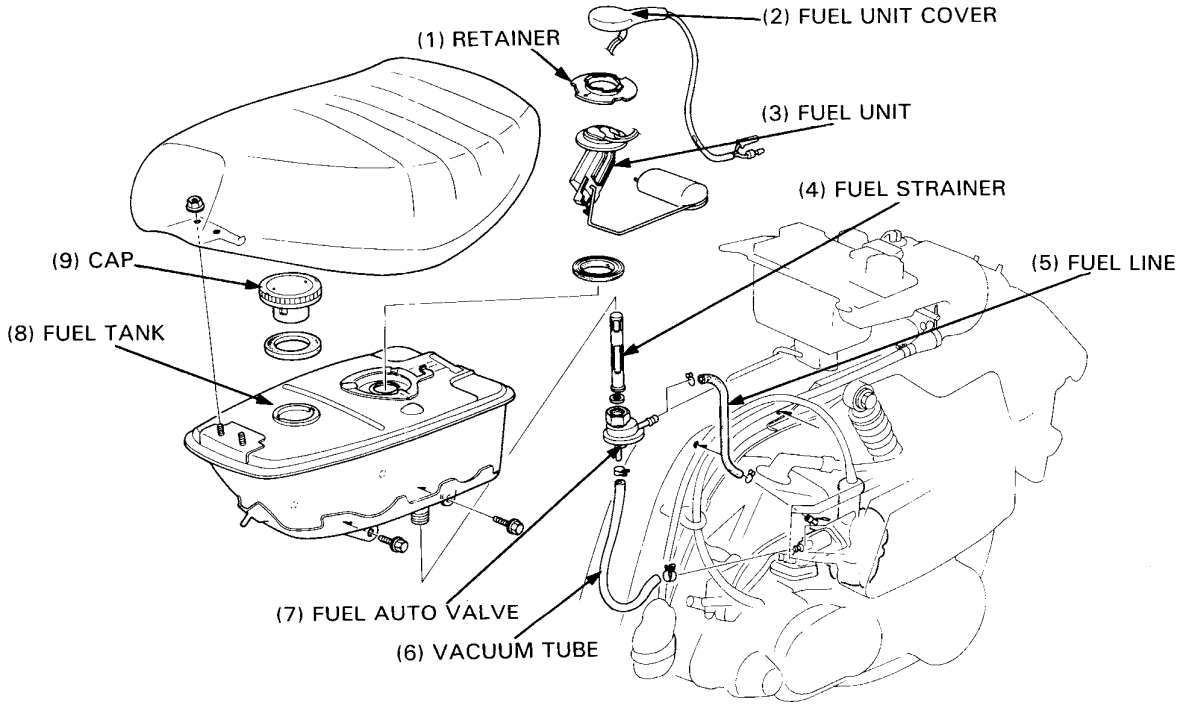

INSTALLATION

Installation is essentially the reverse order of removal.

NOTE

- Align the arrow on the fuel unit retainer with the arrow on the fuel tank.

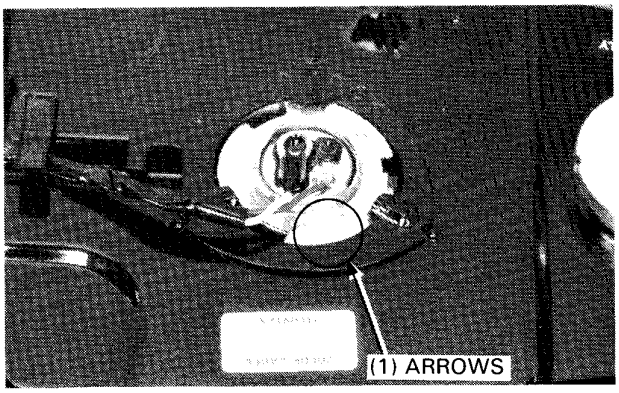

AIR CLEANER CASE

REMOVAL/INSTALLATION

Remove the left frame rear cover (page 11-2).
Open the ignition coil cover and remove the ignition coil from the air cleaner case.
Remove the two air cleaner case mounting bolts and remove the air cleaner case.
Installation is the reverse order of removal.

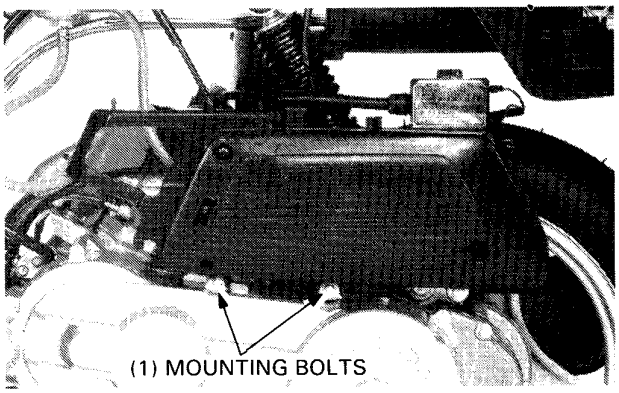

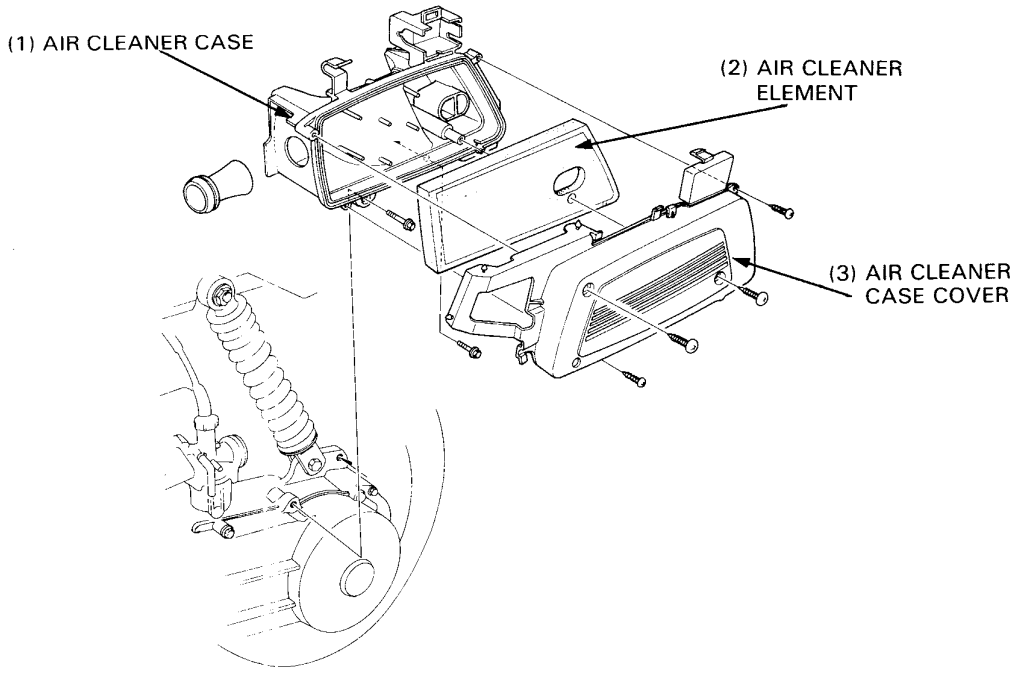

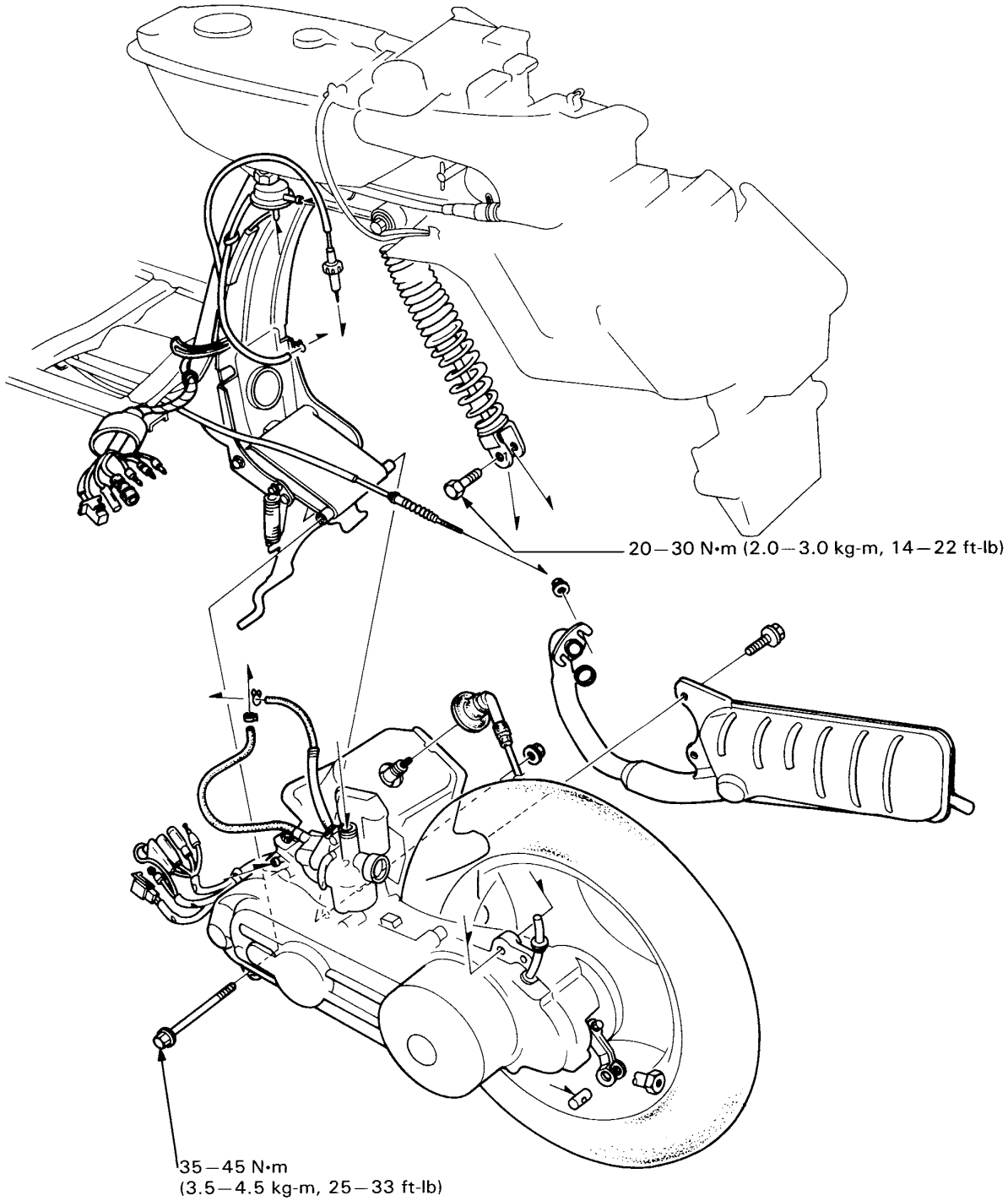
20—30 N·m (2.0—3.0 kg-m, 14—22 ft-lb)
35—45 N·m
(3.5—4.5 kg-m, 25—33 ft-lb)

5. ENGINE REMOVAL/INSTALLATION

SERVICE INFORMATION	5-1	ENGINE INSTALLATION	5-4
ENGINE REMOVAL	5-2		

SERVICE INFORMATION

GENERAL

- The engine must be removed to service the crankshaft.

SPECIFICATION

Engine weight	14 kg (30.9 lb)

TORQUE VALUES

Engine mounting bolts	35—45 N·m (3.5—4.5 kg-m, 25—33 ft-lb)
Rear shock absorber lower bolt	20—30 N·m (2.0—3.0 kg-m, 14—22 ft-lb)

ENGINE REMOVAL

Remove the rear carrier and both rear frame covers (page 11-2).
Disconnect the alternator, starter motor and auto bystarter wire couplers and connectors.

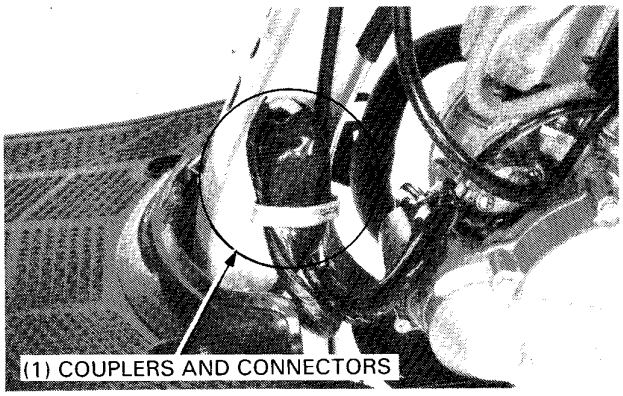

Open the ignition coil cover, remove the plug cap and remove the ignition coil.

Remove the air cleaner case by removing two mounting bolts.

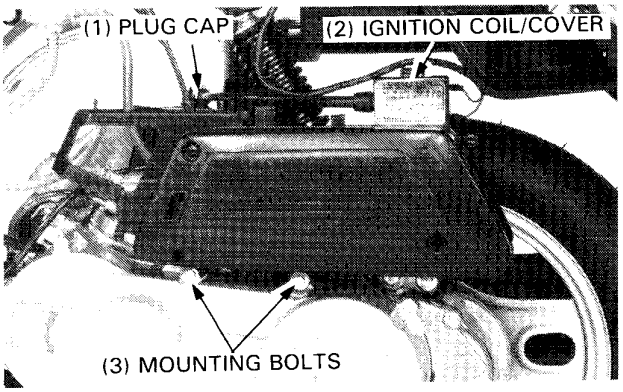

Remove the carburetor cap from the carburetor.
Disconnect the oil, fuel and vacuum tubes.

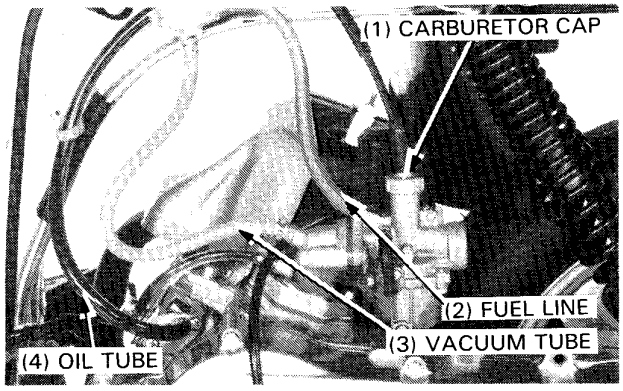

Remove the rear brake adjusting nut and rear brake cable from the clamp on the left crankcase.

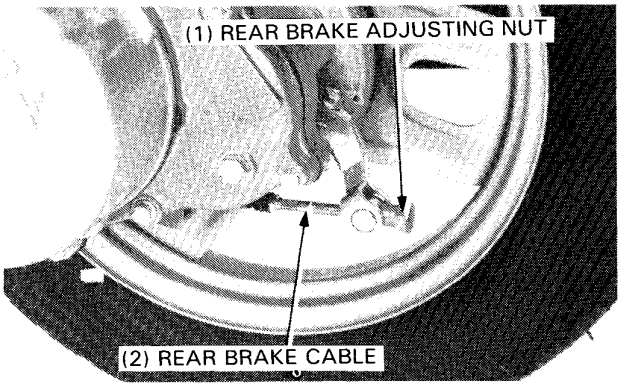

Remove the rear shock absorber lower bolt.

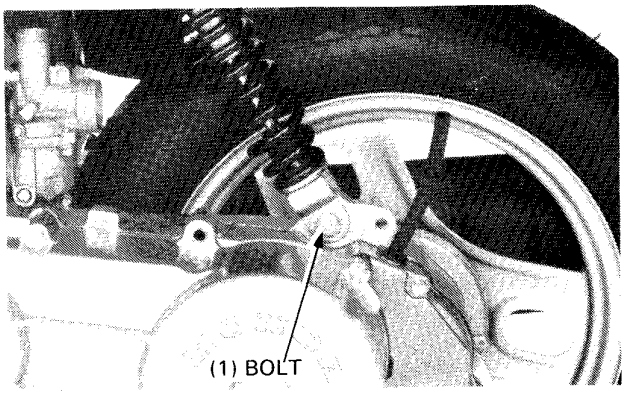

Remove the exhaust muffler.

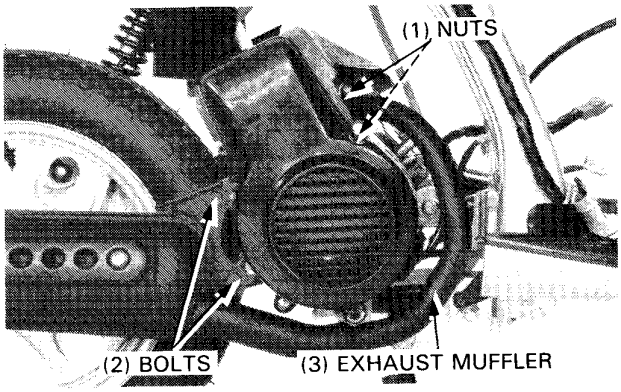

Place a workstand under the engine, to support it.
Remove the engine mounting bolt and nut and separate the engine from the frame.
Remove the following parts when the crankcase is to be separated.

- Carburetor
- Intake pipe and reed valve
- Oil pump
- Rear wheel
- Alternator
- Starter motor
- Drive/driven pulleys
- Cylinder head/cylinder

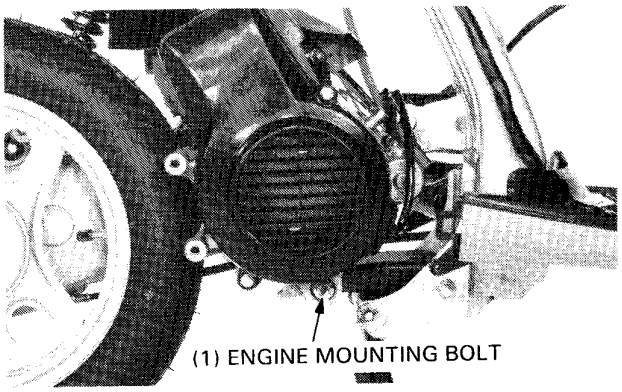

ENGINE MOUNTING BRACKET REMOVAL

Remove the engine mounting bracket bolt and remove the bracket.

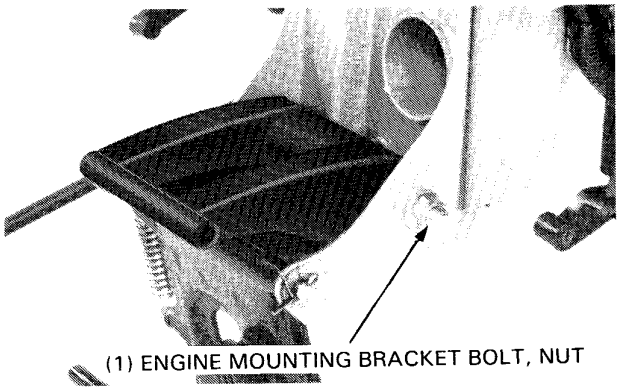

ENGINE INSTALLATION

The installation sequence is essentially the reverse of removal. Torque the engine mounting bolt and rear shock absorber lower bolt to the specified torque values.

TORQUE:
ENGINE MOUNTING BOLT:
35—45 N·m (3.5—4.5 kg-m, 25—33 ft-lb)
REAR SHOCK ABSORBER LOWER BOLT:
20—30 N·m (2.0—3.0 kg-m, 14—22 ft-lb)

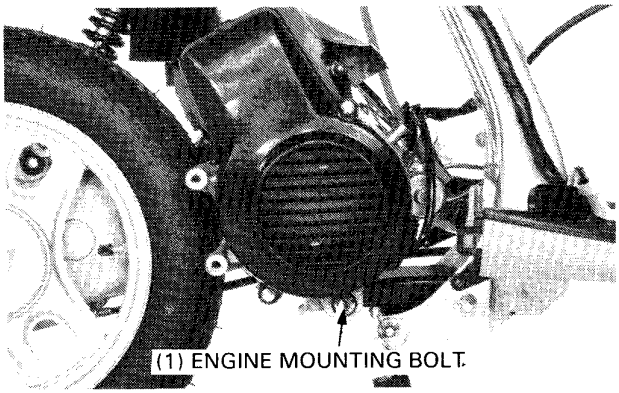
(1) ENGINE MOUNTING BOLT

Perform the following inspections and adjustments after installation:
- Wire and cable routing (page 1-7)
- Carburetor adjustment (pages 3-3, 4)
- Rear brake adjustment (page 3-5)
- Oil pump bleeding/priming (page 2-3)

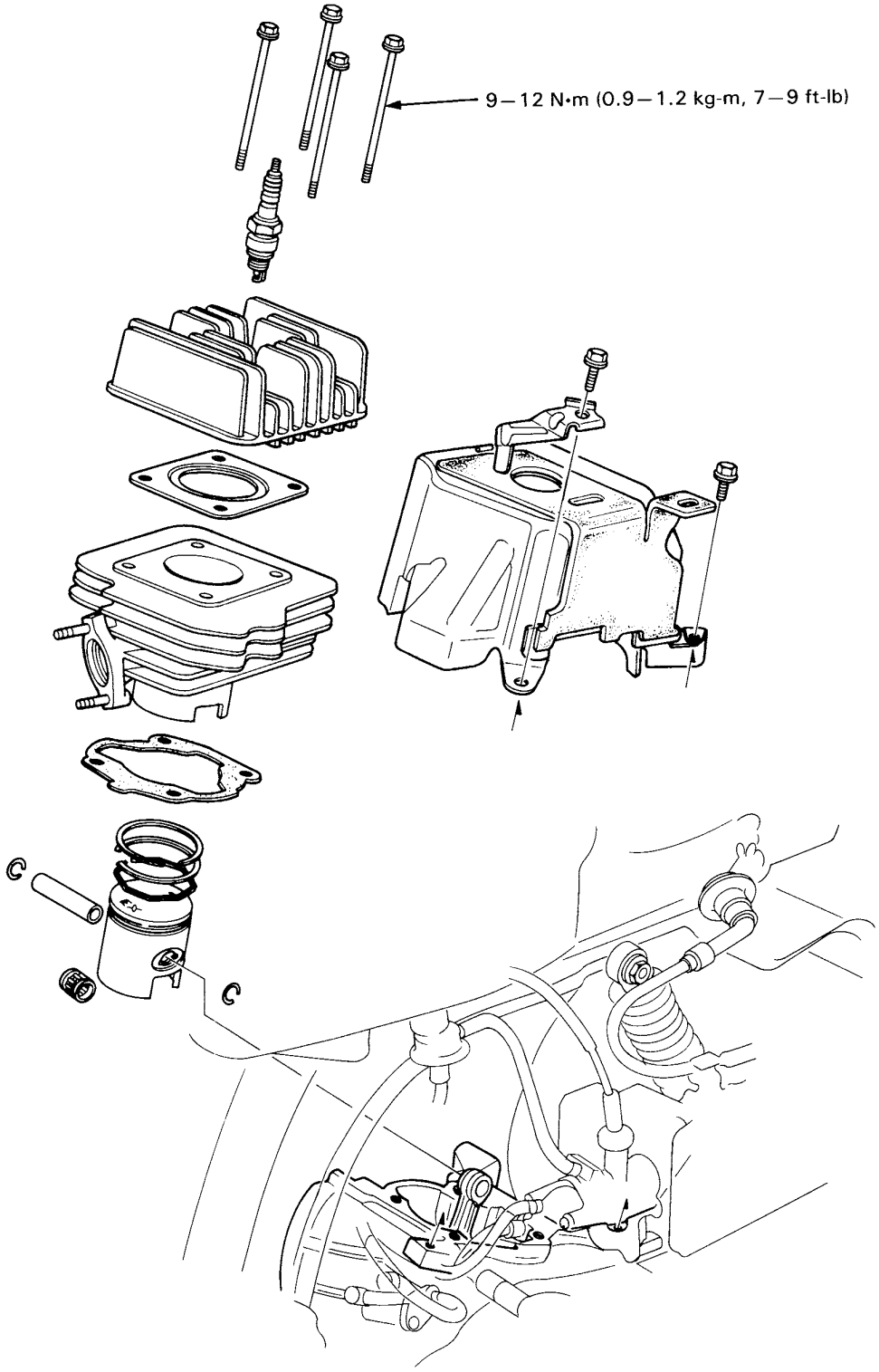
9—12 N·m (0.9—1.2 kg-m, 7—9 ft-lb)

6. CYLINDER HEAD/CYLINDER/PISTON

SERVICE INFORMATION	6-1	CYLINDER HEAD	6-2
TROUBLESHOOTING	6-1	CYLINDER/PISTON	6-4

SERVICE INFORMATION

GENERAL

- All cylinder head, cylinder and piston service can be done with the engine installed in the frame.
- Before disassembly, clean the engine to prevent dirt and dust from entering the cylinder and crankcase.
- Remove all gasket material from the mating surfaces of the cylinder and crankcase.
- Use caution when disassembling and assembling the cylinder head, cylinder and piston to avoid damaging them.
- Clean all disassembled parts thoroughly before inspection. Coat all sliding surfaces with clean 2-stroke injector oil before assembly.

SPECIFICATIONS

ITEM	STANDARD mm (in)	SERVICE LIMIT mm (in)
Cylinder head warpage	——	0.10 (0.004)
Cylinder warpage	——	0.10 (0.004)
Cylinder bore	41.000–41.020 (1.6142–1.6149)	41.050 (1.6162)
Piston O.D. (4 mm from bottom of piston skirt)	40.955–40.970 (1.6124–1.6130)	40.900 (1.6102)
Cylinder-to-piston clearance	0.035–0.050 (0.0013–0.0019)	0.10 (0.004)
Piston pin hole I.D.	10.002–10.008 (0.3938–0.3940)	10.025 (0.3947)
Piston pin O.D.	9.994–10.000 (0.3935–0.3937)	9.980 (0.3929)
Piston-to-piston pin clearance	0.002–0.014 (0.0001–0.0006)	0.030 (0.0012)
Piston ring end gap (top, second)	0.10–0.25 (0.0040–0.0100)	0.50 (0.0197)
Connecting rod small end I.D.	14.005–14.015 (0.5514–0.5518)	14.025 (0.5522)

TORQUE VALUE

Cylinder head bolt	9–12 N·m (0.9–1.2 kg-m, 7–9 ft-lb)

TROUBLESHOOTING

Compression too low, hard starting or poor performance at low speed
- Leaking cylinder head gasket
- Loose spark plug
- Worn, stuck or broken piston rings
- Worn or damaged cylinder and piston
- Faulty reed valve

Compression too high, overheating or knocking
- Excessive carbon build-up in cylinder head or on top of piston

Abnormal noise-piston
- Worn cylinder and piston
- Worn piston pin or piston pin hole
- Worn connecting rod small end bearing

Abnormal noise
- Worn, stuck or broken piston rings
- Worn or damaged cylinder

CYLINDER HEAD

REMOVAL

Remove both frame rear covers (page 11-2) and the fan cover.

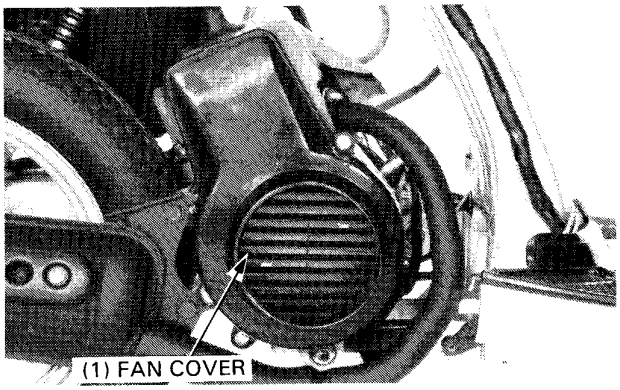

Remove the following parts:
- air cleaner case (page 4-13).
- spark plug cap and spark plug.
- cylinder head shroud mounting bolts and cylinder head shroud.

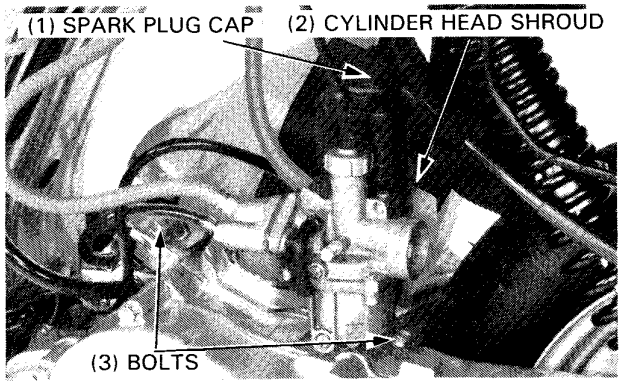

Remove the exhaust muffler.

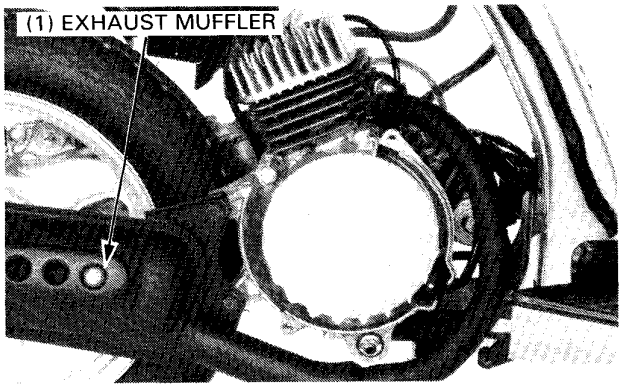

Remove the four cylinder head bolts and remove the cylinder head.
Remove the cylinder head gasket.

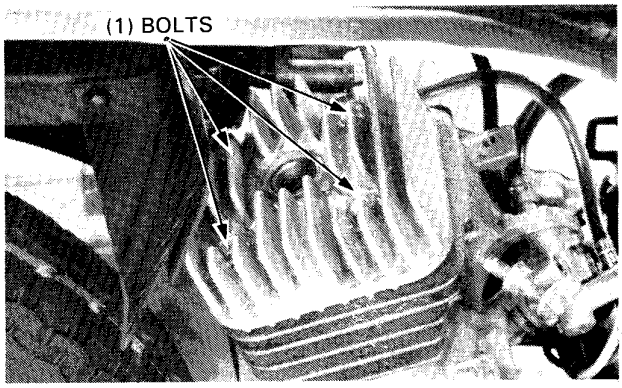

INSPECTION

Remove the carbon deposits from the combustion chamber, and the piston head.
Clean the head gasket surface.

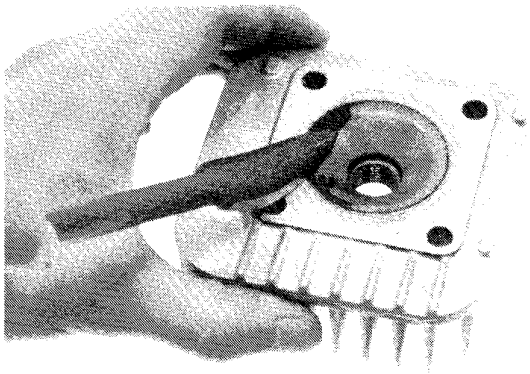

CAUTION

- *Avoid damaging the combustion chamber wall and gasket surfaces.*

Check the cylinder head for warpage with a straight edge and a feeler gauge in the directions shown.

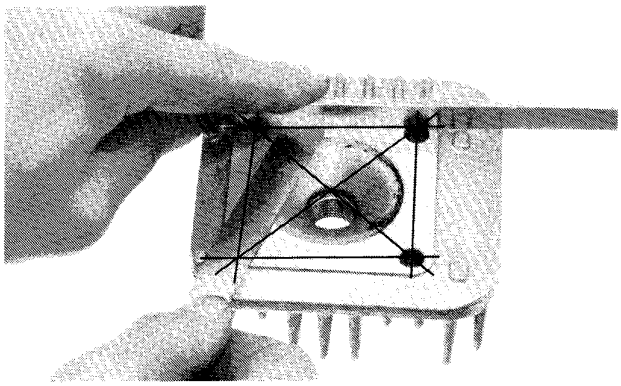

SERVICE LIMIT: 0.10 mm (0.004 in)

INSTALLATION

Install a new cylinder head gasket.

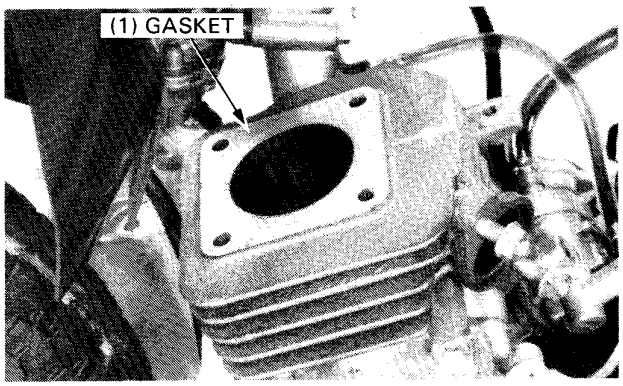

Install the cylinder head on the cylinder.
Install and tighten the four cylinder head bolts in a crisscross pattern, in 2 to 3 steps.

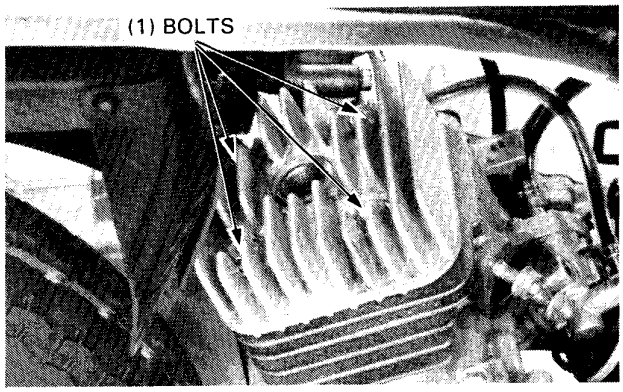

TORQUE: 9—12 N·m (0.9—1.2 kg-m, 7—9 ft-lb)

Install the exhaust muffler.

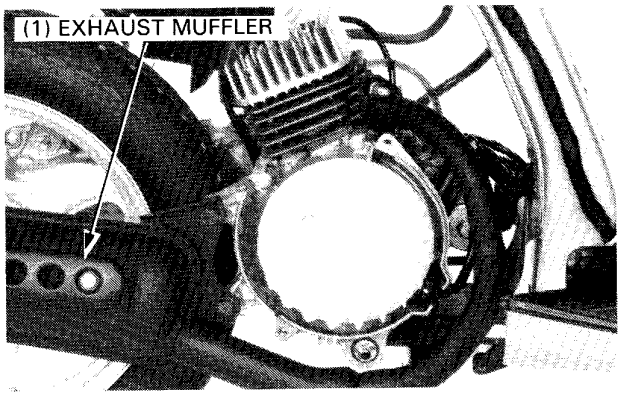

Install the cylinder head shroud and tighten the mounting bolts.
Install the spark plug and spark plug cap.
Install the air cleaner case (page 4-13).

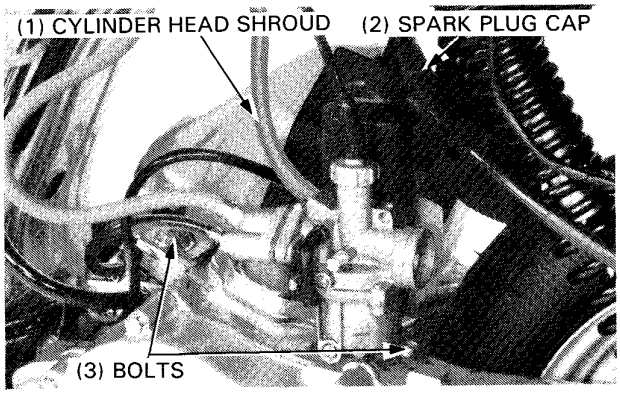

Install the fan cover and both frame rear covers.

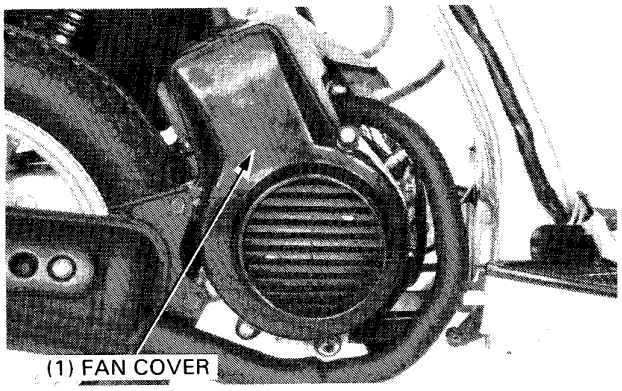

CYLINDER/PISTON

CYLINDER REMOVAL

Remove the cylinder head (page 6-2).

Remove the cylinder being careful not to damage the piston.

CAUTION

- *Do not pry between the cylinder and crankcase or strike the fins.*

Place a shop towel into the crankcase around the piston.

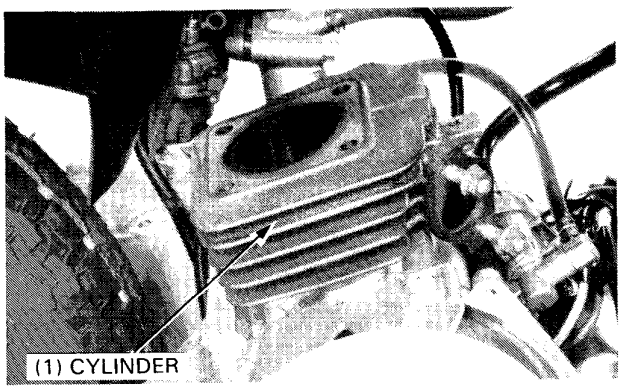

PISTON REMOVAL

Remove the piston pin clip using a pair of pliers.
Press the piston pin out of the piston.

NOTE

- Do not damage or scratch the piston.
- Do not apply side force to the connecting rod.
- Do not let the clip fall into the crankcase.

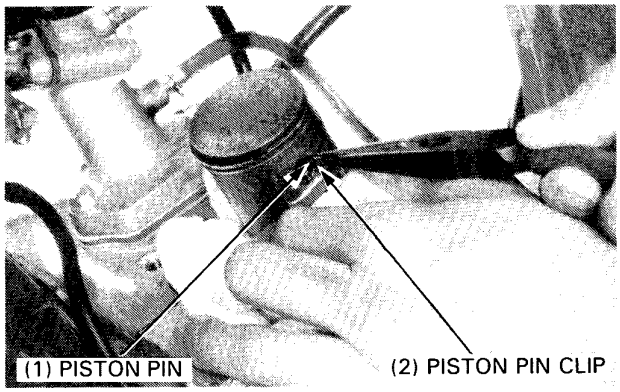

PISTON RING/EXPANDER REMOVAL

Remove the piston rings.

NOTE

- Spread each piston ring and remove it by lifting it up at a point just opposite the gap.

CYLINDER/PISTON INSPECTION

Check the cylinder and piston for wear or damage.
Clean carbon deposits from the exhaust port area.

CAUTION

- *Do not scratch or score the cylinder liner.*

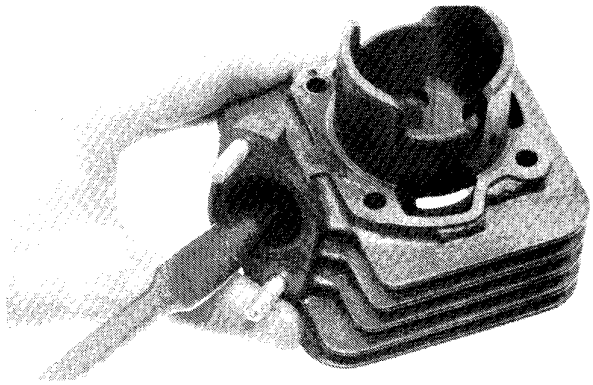

Inspect the cylinder bore for wear at three levels in the X and Y directions. Use the largest measurement to determine the amount of cylinder wear.

SERVICE LIMIT: 41.050 mm (1.6162 in)

CAUTION

- *The cylinder has an A or B mark on the crankcase mating face as shown. When the cylinder is replaced, use a new cylinder with the same mark as the old one.*

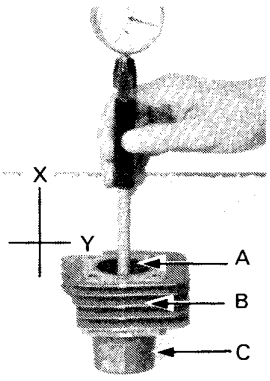

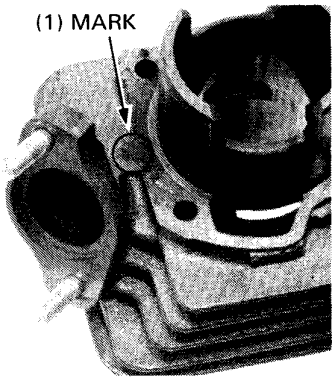

Check the cylinder for warpage with a straight edge and a feeler gauge in the directions shown.

SERVICE LIMIT: 0.10 mm (0.004 in)

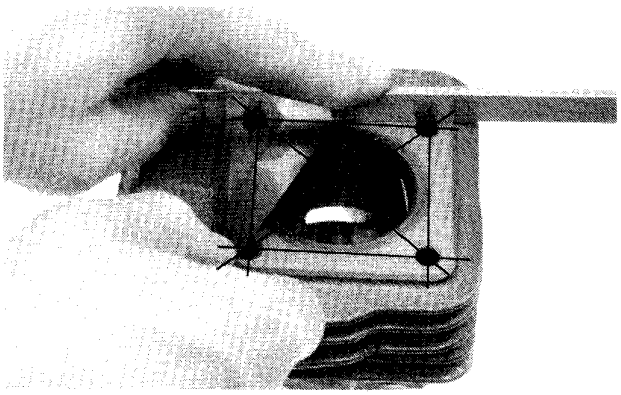

Measure the piston O.D. at a point 4 mm from the bottom of the skirt.

SERVICE LIMIT: 40.900 mm (1.6102 in)

Calculate the piston-to-cylinder clearance.

SERVICE LIMIT: 0.10 mm (0.004 in)

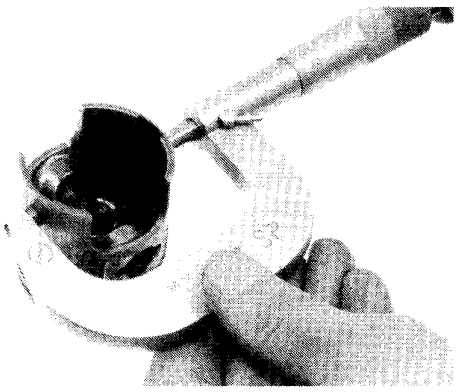

Measure the piston pin hole I.D.

SERVICE LIMIT: 10.025 mm (0.3947 in)

Measure the piston pin O.D.

SERVICE LIMIT: 9.980 mm (0.3929 in)

Calculate the piston-to-piston pin clearance

SERVICE LIMIT: 0.030 mm (0.0012 in)

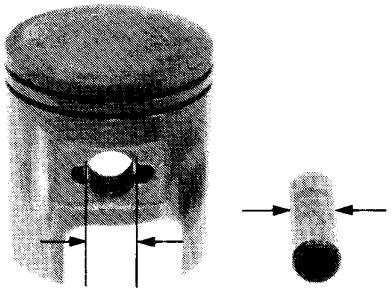

PISTON RING INSPECTION

Set each piston ring squarely into the cylinder 30 mm (1-1/4 in) from the bottom using the piston and measure the end gap with a feeler gauge.

SERVICE LIMIT: 0.50 mm (0.0197 in)

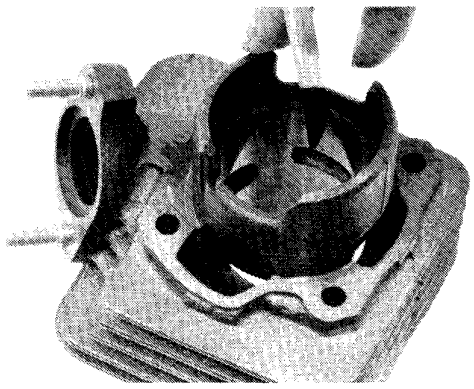

CONNECTING ROD INSPECTION

Install the bearing and piston pin in the connecting rod small end and check for excessive play.
Measure the connecting rod small end I.D.

SERVICE LIMIT: 14.025 (0.5522 in)

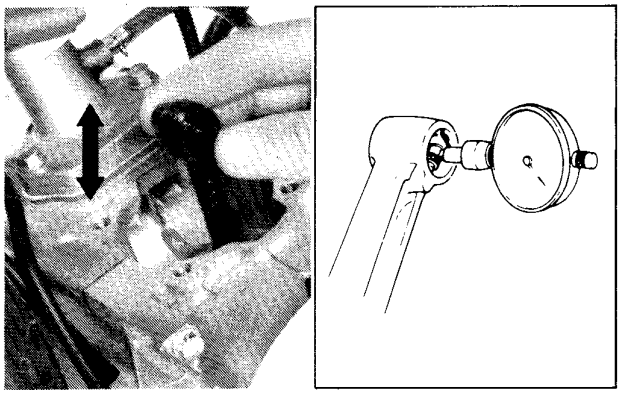

PISTON/CYLINDER INSTALLATION

Clean the piston ring grooves.
Lubricate the piston rings and piston ring grooves with clean 2-stroke oil.
Install the piston rings on the piston, with the marks facing up.

NOTE

- After installation, check that the rings rotate freely in the ring grooves.

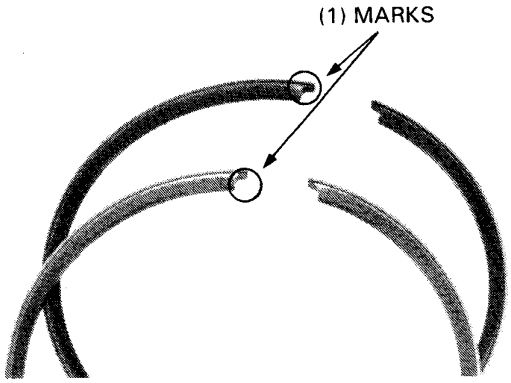

Coat the needle bearing and piston pin with 2-stroke oil.
Install the needle bearing in the connecting rod, and install the piston with the "EX" mark facing the exhaust side.
Install new piston pin clips.

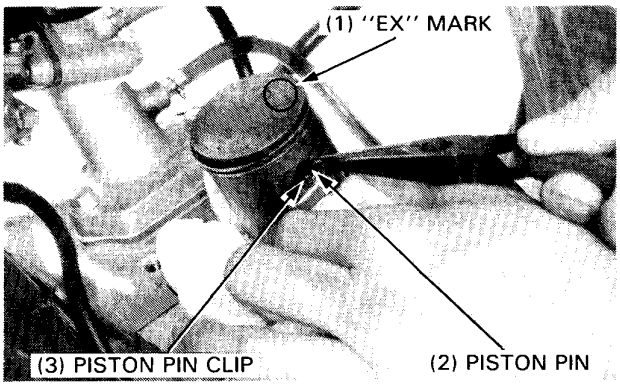

Remove all gasket material from the cylinder and crankcase mating surfaces.

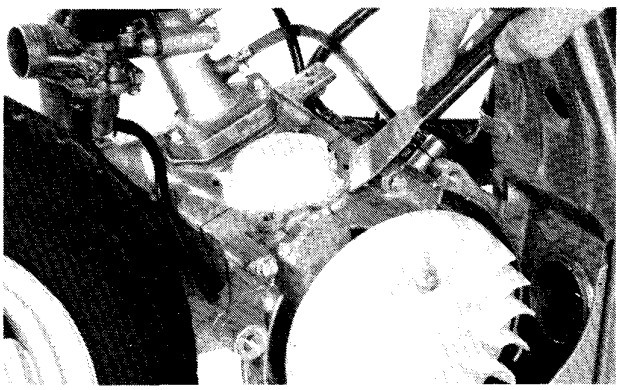

Be sure the ring end gaps are aligned with the piston ring pins in the ring grooves.

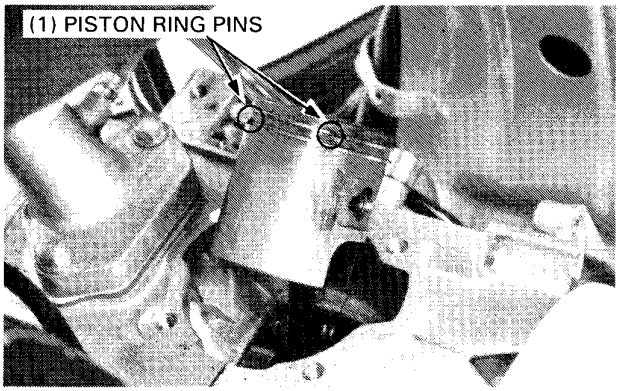

CAUTION

- *Be sure the rings do not rotate in their grooves over the locating pins to prevent ring breakage and piston and cylinder damage.*

Install a new cylinder gasket onto the cylinder.

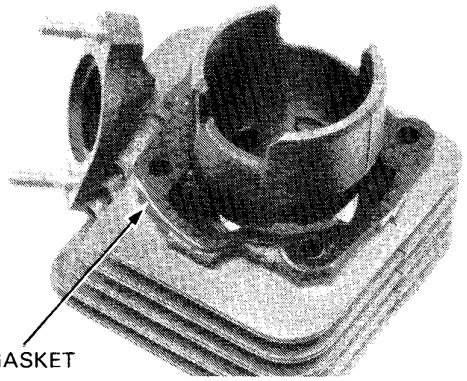

Remove the shop towel from the crankcase.
Lubricate the piston and cylinder with 2-stroke oil and install the cylinder over the piston while compressing the piston rings.

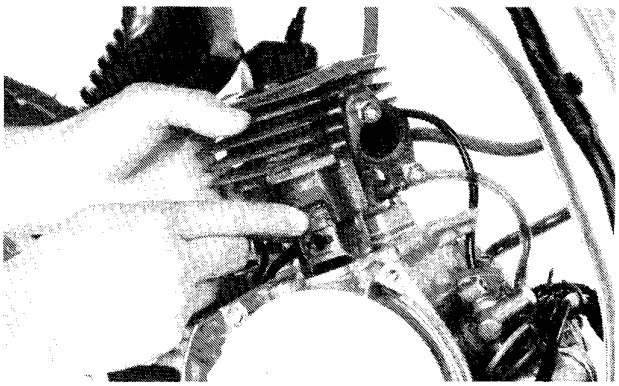

CAUTION

- *Avoid damaging the sliding surface of the piston.*

Install the cylinder head (page 6-3).
After assembly is complete, perform a compression test.
Check for any abnormal engine noise or air leakage past the cylinder.

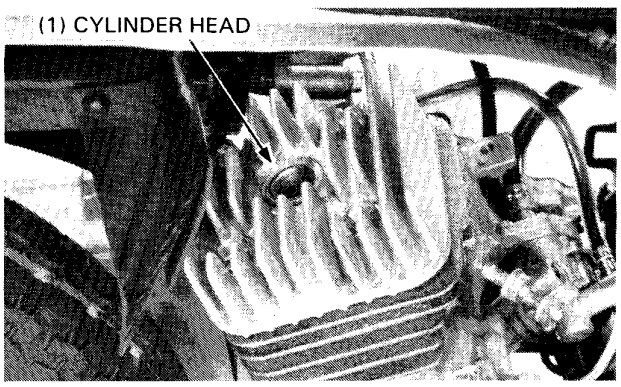

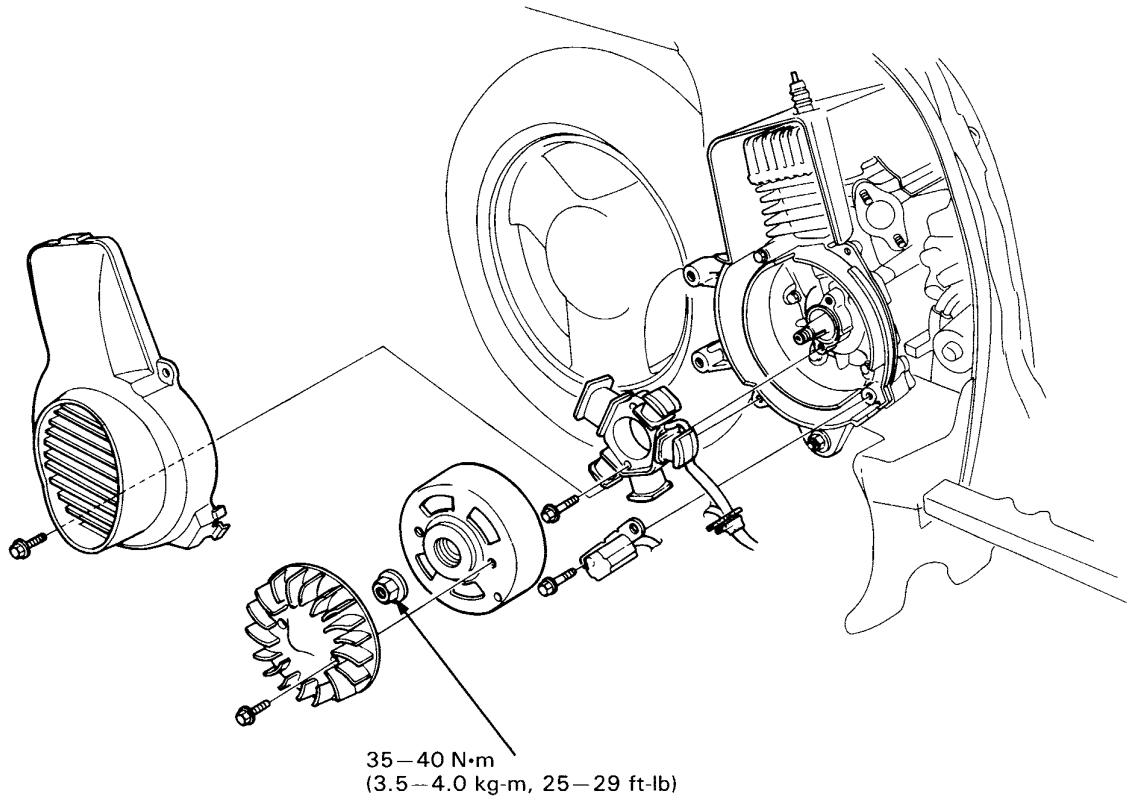
35—40 N•m
(3.5—4.0 kg-m, 25—29 ft-lb)

7. ALTERNATOR

SERVICE INFORMATION	7-1	ALTERNATOR	7-2

SERVICE INFORMATION

GENERAL

- See Section 14 for alternator inspection.

TORQUE VALUE

Flywheel nut	35–40 N·m (3.5–4.0 kg-m, 25–29 ft-lb)

TOOLS

Common	
Flywheel puller	07733–0010000 or 07933–0010000
Universal holder	07725–0030000

ALTERNATOR

REMOVAL

Remove both frame rear covers (page 11-2) and the fan cover.

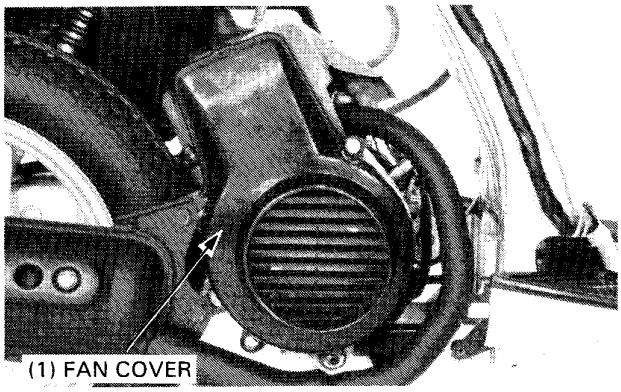

Remove the two bolts attaching the cooling fan and remove the cooling fan.

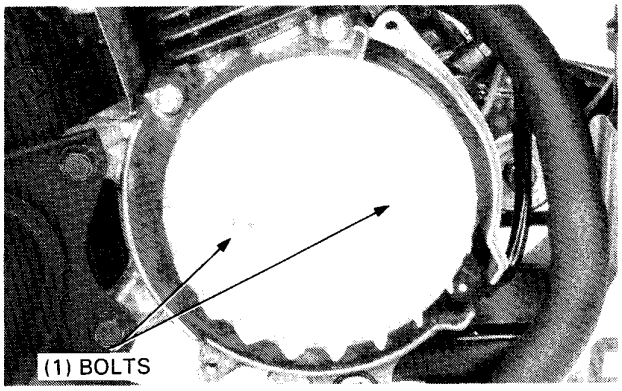

Hold the flywheel with the universal holder and remove the flywheel flange nut.

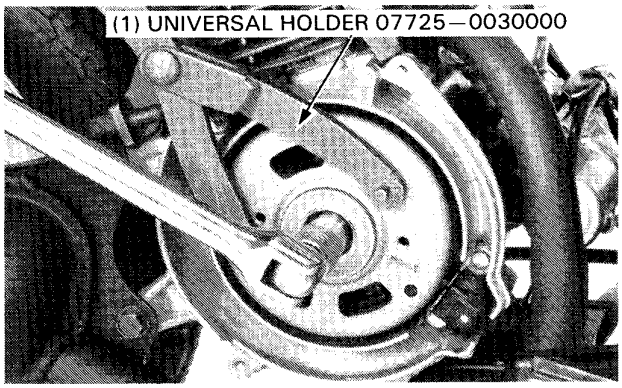

Remove the flywheel with the flywheel puller.
Remove the woodruff key.

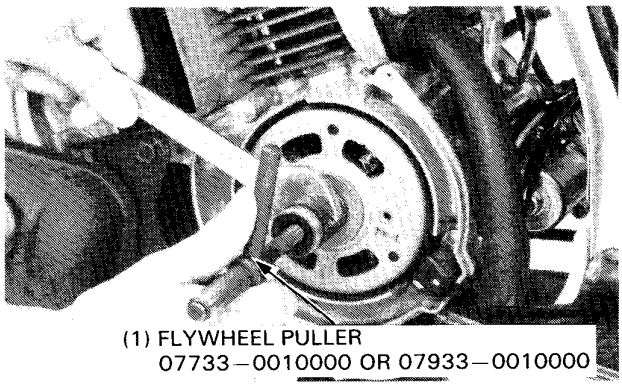

Disconnect the alternator wire connectors.

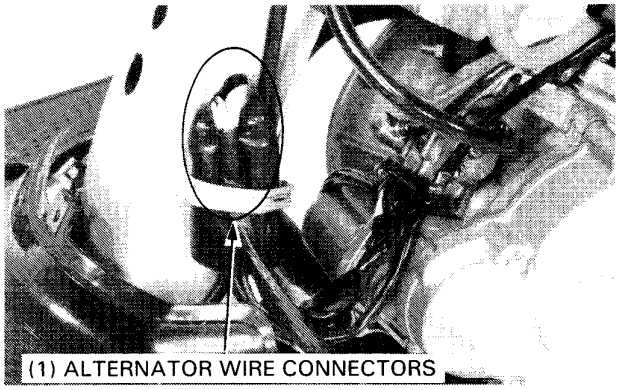

Remove the two bolts attaching the stator and remove the stator.
Remove the two bolts attaching the pulse generator and remove the pulse generator.

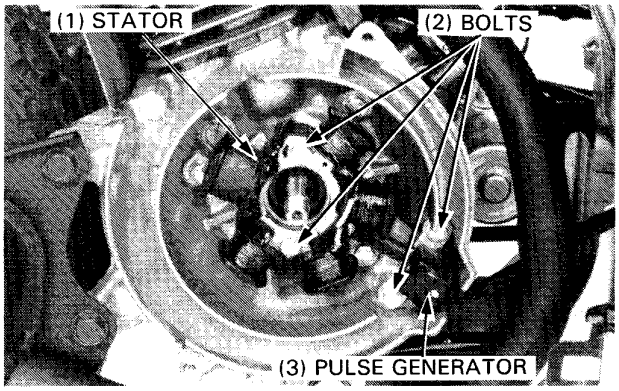

INSTALLATION

Install the alternator wire grommet in the case groove.

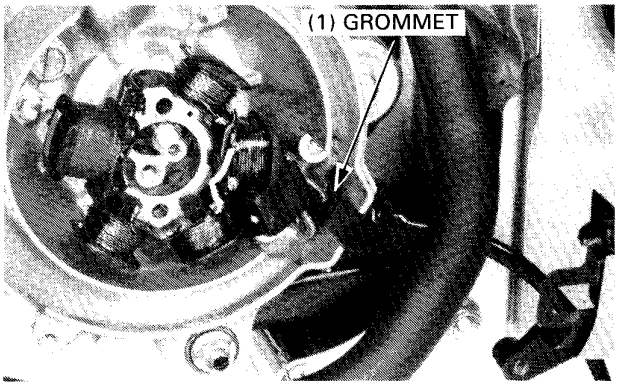

Install the stator and pulse generator.

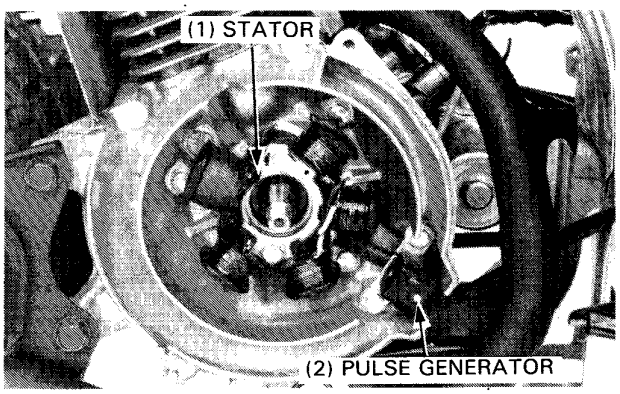

Connect the alternator wire connectors.

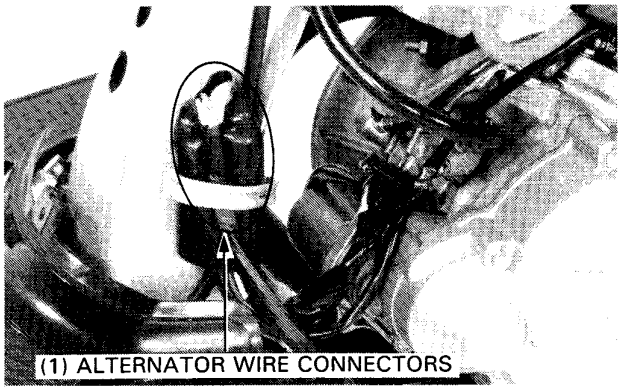

Install the woodruff key in the keyway in the crankshaft.

NOTE

- Clean the taper hole in the flywheel of any burrs and dirt.

Install the flywheel onto the crankshaft.

NOTE

- Make sure that there are no foreign particles inside the flywheel.

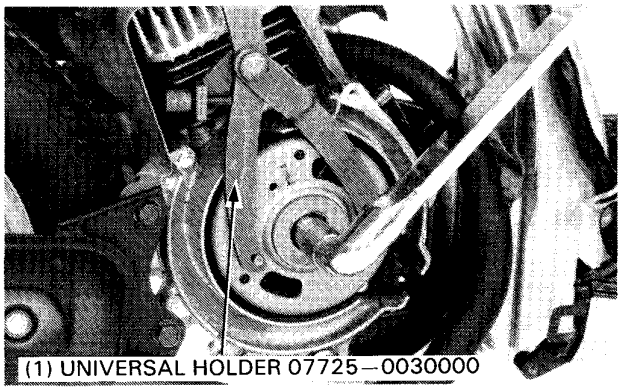

Hold the flywheel with the universal holder and torque the flywheel flange nut.

TORQUE: 35—40 N·m (3.5—4.0 kg-m, 25—29 ft-lb)

Install the cooling fan.
Start the engine and check the ignition timing (page 14-6).
Install all removed parts in the reverse order of removal.

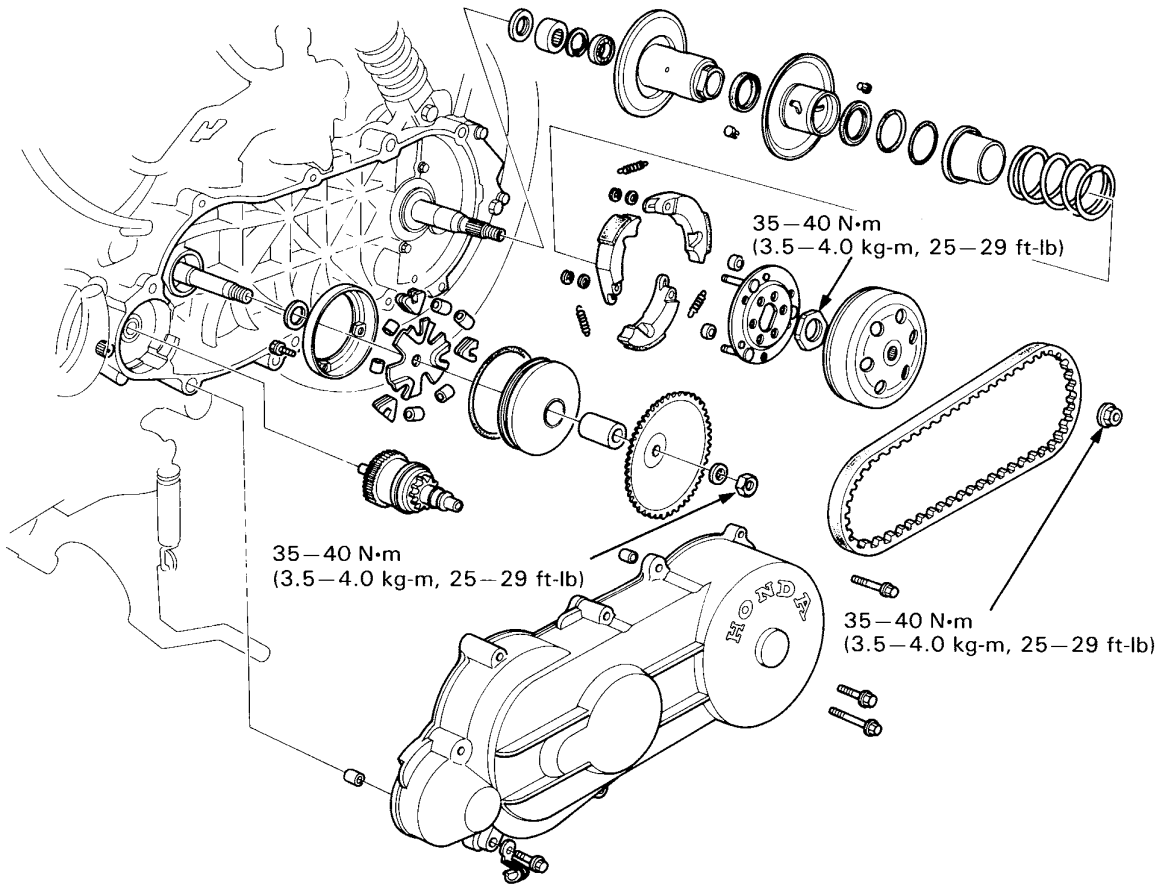
35—40 N·m
(3.5—4.0 kg-m, 25—29 ft-lb)
35—40 N·m
(3.5—4.0 kg-m, 25—29 ft-lb)
35—40 N·m
(3.5—4.0 kg-m, 25—29 ft-lb)
HONDA

8. DRIVE AND DRIVEN PULLEYS/CLUTCH

SERVICE INFORMATION	8-1	CLUTCH/DRIVEN PULLEY	8-5
TROUBLESHOOTING	8-1	STARTER PINION	8-11
DRIVE PULLEY	8-2		

SERVICE INFORMATION

GENERAL

- Keep oily substances off the drive belt and pulley.

SPECIFICATIONS

ITEM	STANDARD mm (in)	SERVICE LIMIT mm (in)
Drive belt width	15.5 (0.61)	14.0 (0.55)
Movable drive face bushing I.D.	20.035–20.095 (0.7888–0.7911)	20.130 (0.7925)
Drive face boss O.D.	20.005–20.025 (0.7876–0.7884)	19.97 (0.786)
Weight roller O.D.	15.92–16.08 (0.627–0.633)	15.40 (0.606)
Clutch outer I.D.	107.0–107.2 (4.21–4.22)	107.5 (4.23)
Clutch shoe thickness	4.0–4.1 (0.157–0.161)	2.0 (0.08)
Driven face spring free length	94.2 (3.71)	88.8 (3.50)
Driven face O.D.	33.055–34.005 (1.3014–1.3388)	33.035 (1.3006)
Movable driven face I.D.	34.000–34.031 (1.3386–1.3398)	34.066 (1.3412)

TORQUE VALUES

Drive pulley nut	35–40 N·m (3.5–4.0 kg-m, 25–29 ft-lb)
Clutch outer nut	35–40 N·m (3.5–4.0 kg-m, 25–29 ft-lb)
Clutch lock nut	35–40 N·m (3.5–4.0 kg-m, 25–29 ft-lb)

TOOLS

Special

Lock nut wrench, 39 mm	07916–1870002
Clutch spring compressor	07960–KJ90000
Attachment, 28 x 30 mm	07946–1870100
Bearing driver	07945–GC80000
Bearing remover, 17 mm	07936–3710300
Bearing remover handle	07936–3710100
Remover weight	07741–0010201 or 07936–3710200

Common

Universal holder	07725–0030000
Driver	07749–0010000

TROUBLESHOOTING

Engine starts, but scooter won't move
- Worn drive belt
- Broken ramp plate
- Worn or damaged clutch lining
- Broken driven face spring
- Damaged driven pulley shaft splines

Engine stalls or scooter starts suddenly
- Broken clutch weight spring
- Damaged clutch lining

Poor performance at high speed or lack of power
- Worn drive belt
- Weak driven face spring
- Worn weight roller
- Faulty driven face
- Worn or seized driven pulley bearing

Clutch noise or smell
- Oil or grease on drive belt or pulley
- Worn drive belt
- Weak driven face spring
- Worn or seized driven pulley bearing

DRIVE PULLEY

LEFT CRANKCASE COVER REMOVAL

Remove the following parts:
- both frame rear covers (page 11-2).
- air cleaner case (page 4-13).
- left crankcase cover attaching bolts and the cover.

NOTE

- Never turn the starter motor with the left crankcase cover removed.

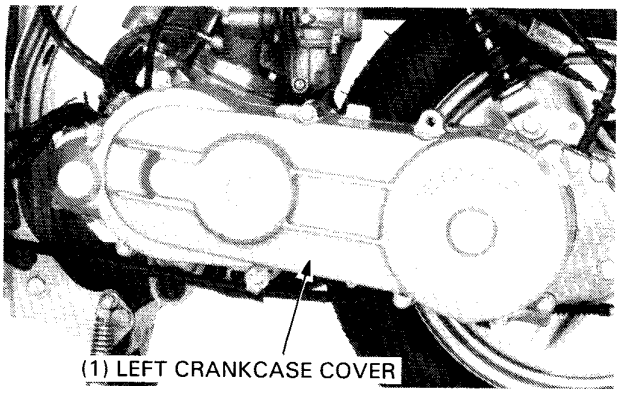

MOVABLE DRIVE FACE REMOVAL

Remove the fan cover and the fan.
Hold the flywheel with the universal holder.

Remove the nut, then remove the starter driven gear and drive belt.
Remove the drive face.

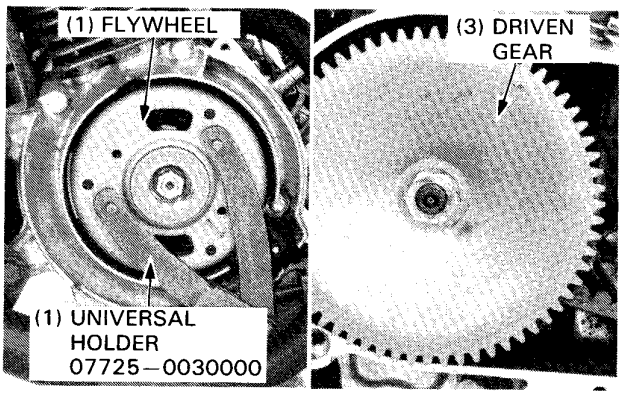

DRIVE BELT INSPECTION

Check the drive belt for cracks, separation or abnormal or excessive wear.

SERVICE LIMIT: 14.0 mm (0.55 in)

NOTE

- Use only a genuine Honda replacement drive belt.

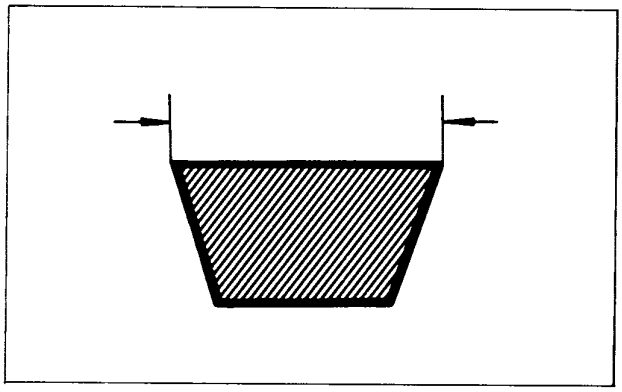

MOVABLE DRIVE FACE DISASSEMBLY

Remove the three bolts attaching the movable drive face seal and remove the seal.

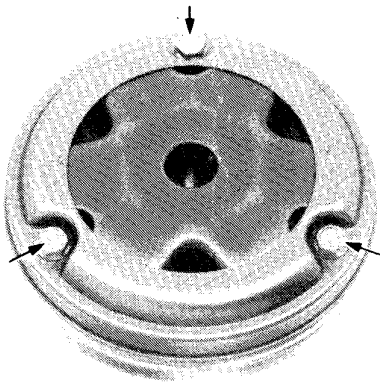

Remove the ramp plate.

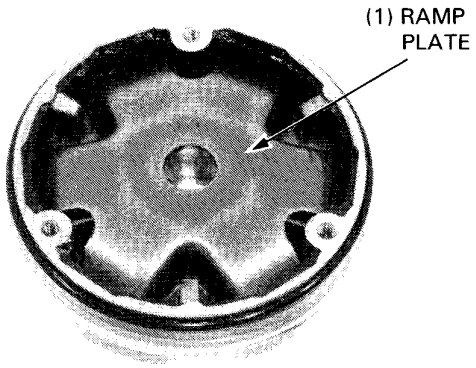

Remove the weight rollers.

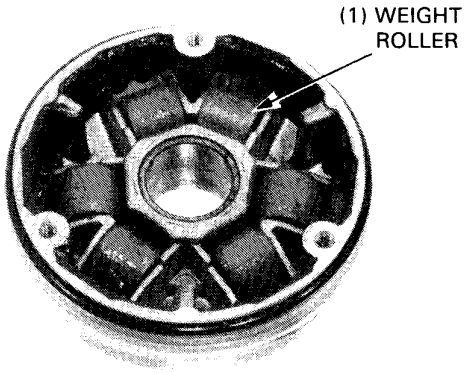

MOVABLE DRIVE FACE INSPECTION

Check each roller for wear or damage.
Measure each roller O.D.

SERVICE LIMIT: 15.40 mm (0.606 in)

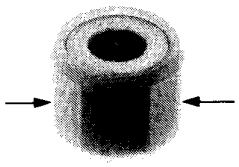

Measure the movable drive face bushing I.D.

SERVICE LIMIT: 20.130 mm (0.7925 in)

Replace the drive face if the I.D. exceeds the service limit.

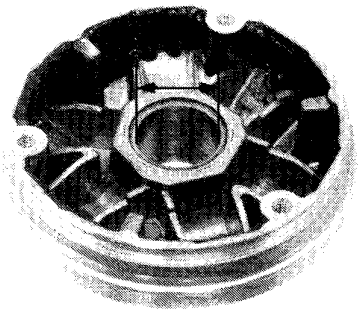

Inspect the drive face boss for wear or damage.
Measure the O.D. at the drive face contacting surface.

SERVICE LIMIT: 19.97 mm (0.786 in)

Replace the boss if the O.D. is less than the service limit.

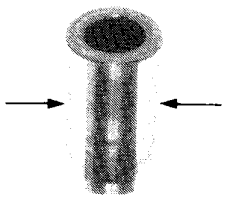

MOVABLE DRIVE FACE ASSEMBLY

Lubricate the inside of the drive face with 10—15g (0.35—0.53 oz) of grease, then install the weight rollers.

SPECIFIED GREASE: Lithium Based Grease
Mitsubishi HD-3
Nippon Sekiyu Lipanox Deluxe 3
Idemitsu Coronex 3
Sta-Lube MP #3141
Bel-Ray Moly Lube 126 EP#0

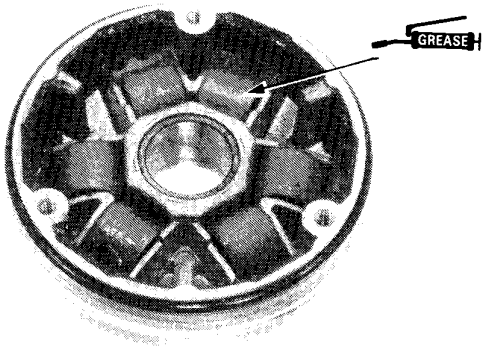

Install the ramp plate and movable face seal.
Torque the seal attaching bolts to the specified torque.

TORQUE: 2.5—4.0 N·m (0.25—0.40 kg-m, 2—3 ft-lb)

NOTE

- Make sure that the O-ring is in position.

Install the drive face boss in the movable drive face.

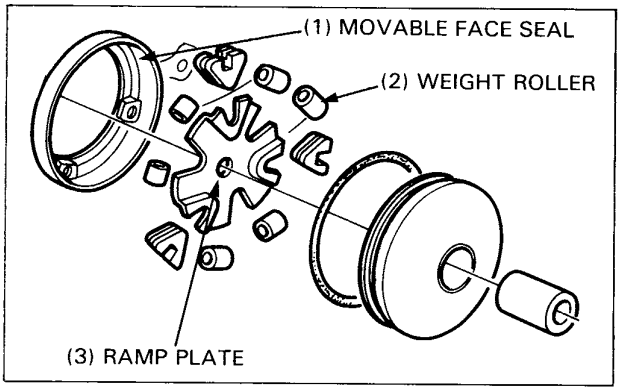

MOVABLE DRIVE FACE INSTALLATION

Install the thrust washer onto the crankshaft, then install the drive face assembly.
Install the drive belt.

NOTE

- Clean the hole in the movable drive face, drive face boss and crankshaft.

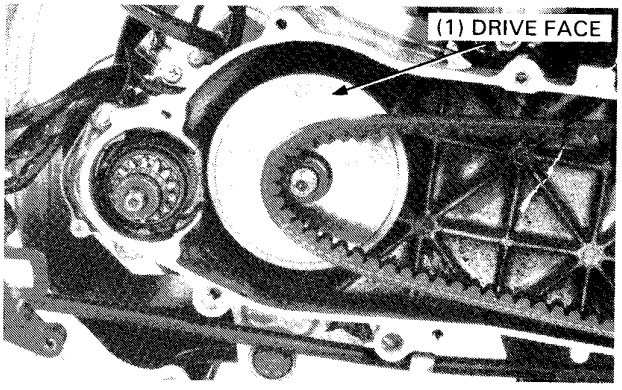

Install the starter driven gear and nut.
Hold the flywheel with the universal holder, then tighten the nut.

TORQUE: 35—40 N·m (3.5—4.0 kg-m, 25—29 ft-lb)

NOTE

- Do not get oil or grease on the drive belt or pulleys.

Install the fan and fan cover.

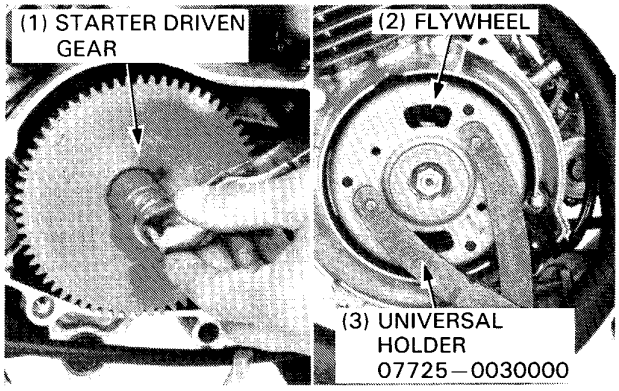

LEFT CRANKCASE INSTALLATION

Install a new gasket and dowel pins.

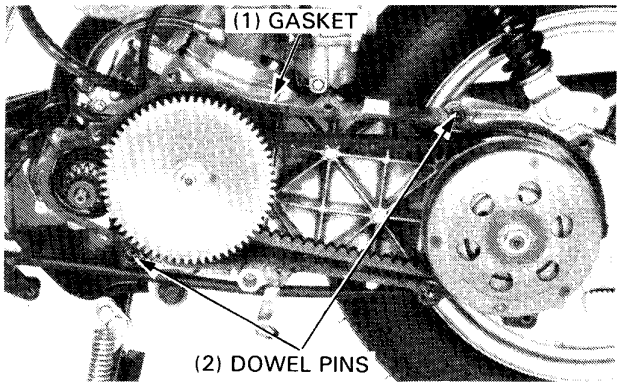

Install the left crankcase cover, the air cleaner case, and both frame rear covers (page 11-2).

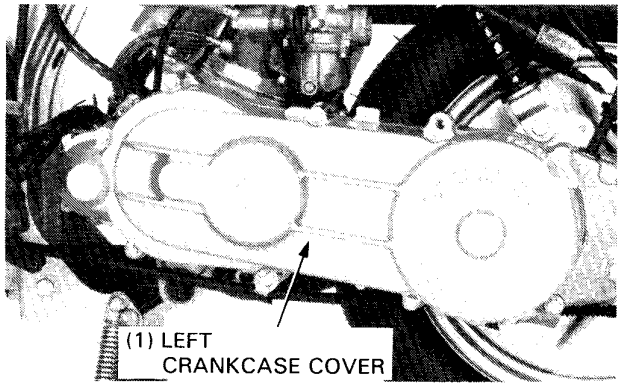

CLUTCH/DRIVEN PULLEY

REMOVAL

Remove both frame rear covers (page 11-2) and the left crankcase cover.
Remove the starter driven gear and drive belt.
Hold the clutch outer with the universal holder.
Remove the nut, then remove the clutch outer.

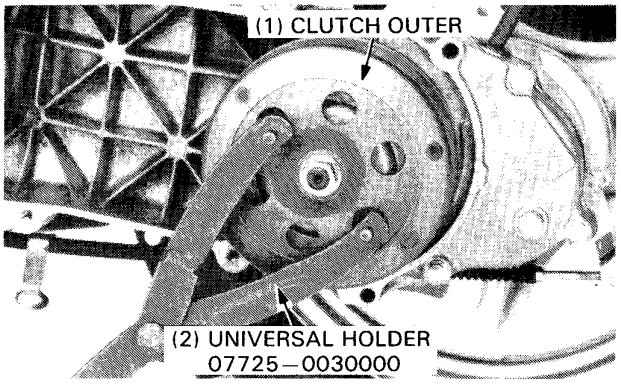

Remove the driven pulley from the drive shaft.

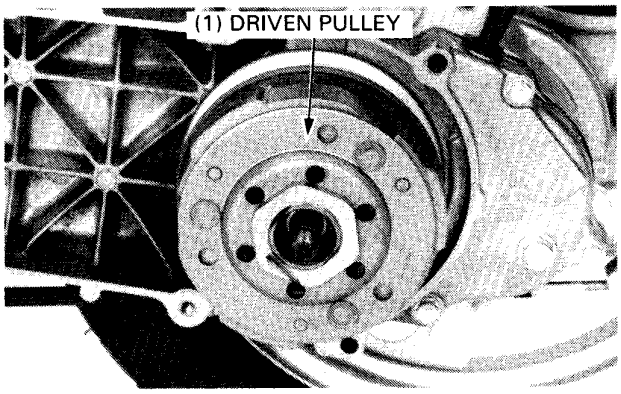

CLUTCH DISASSEMBLY

Install the clutch spring compressor and remove the 28 mm nut.
Remove the compressor and remove the clutch and driven face spring from the driven pulley.

CAUTION

- *Do not overtighten the clutch spring compressor.*

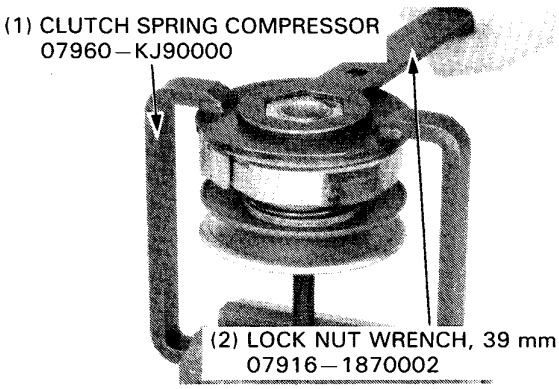

CLUTCH INSPECTION

Inspect the clutch outer for wear or damage.
Measure the clutch outer I.D.

SERVICE LIMIT: 107.5 mm (4.23 in)

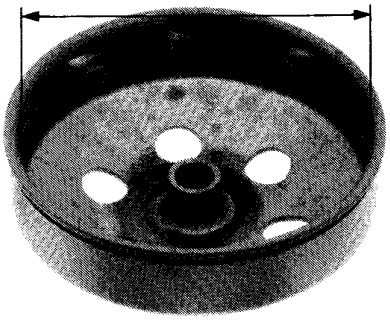

Measure the driven face spring free length.

SERVICE LIMIT: 88.8 mm (3.50 in)

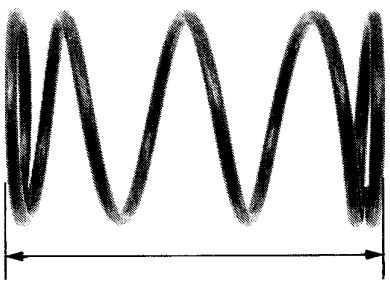

Inspect the clutch shoes for wear or damage.
Measure the thickness of each shoe.

SERVICE LIMIT: 2.0 mm (0.08 in)

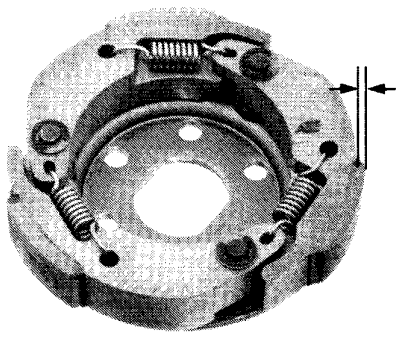

CLUTCH SHOES REPLACEMENT

Remove the circlips and washers.
Remove the clutch shoes and shoe springs.
Install the clutch springs on the new clutch shoes.
Apply grease to the pivot shafts.
Check the damper rubbers and replace them if they are damaged.
Install the clutch shoes onto the drive plate and secure them with the washers and circlips.

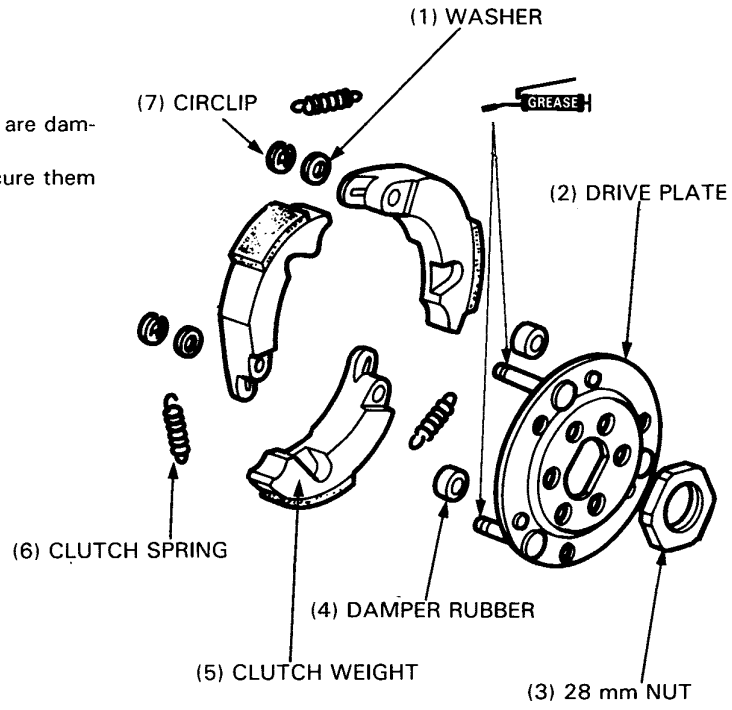

DRIVEN PULLEY DISASSEMBLY

Remove the seal collar.

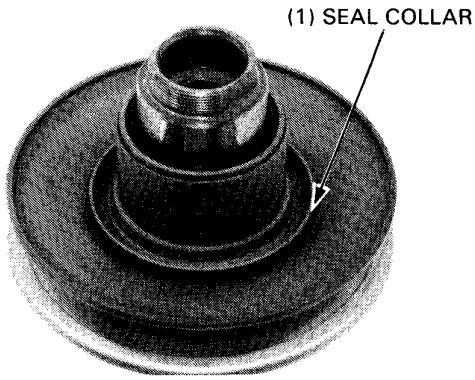

Remove the guide pins, then remove the movable driven face.
Remove the oil seals and O-rings.

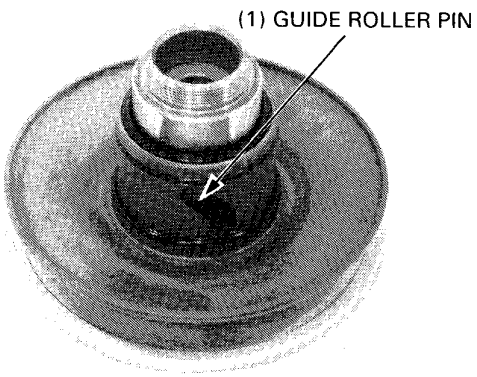

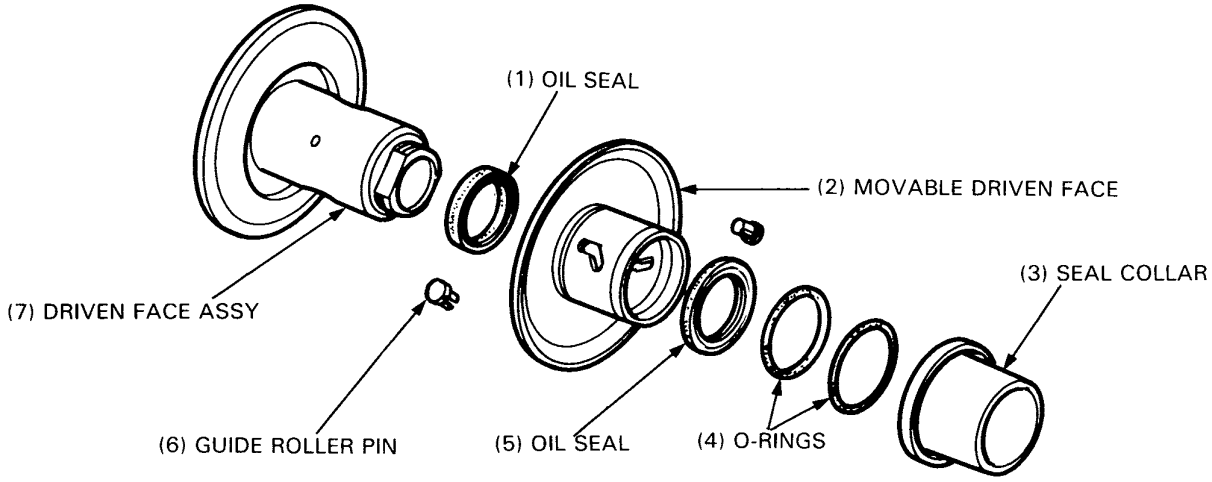

Inspect the driven face assembly for wear or damage.
Measure the driven face O.D.

SERVICE LIMIT: 33.035 mm (1.3006 in)

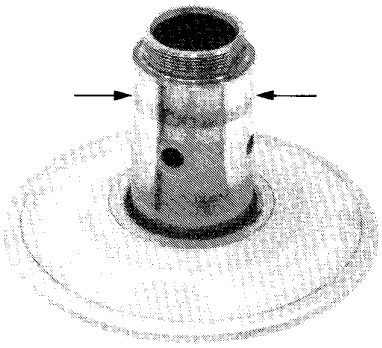

Inspect the movable driven face for wear or damage.
Measure the movable driven face I.D.

SERVICE LIMIT: 34.066 mm (1.3412 in)

Check the guide groove for wear.

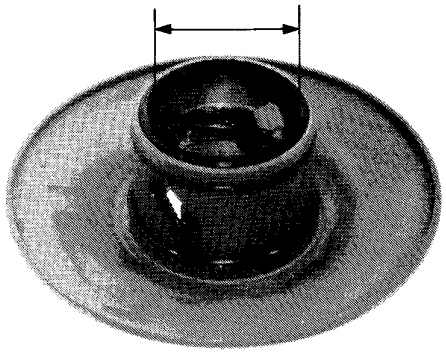

MOVABLE DRIVEN FACE BEARING REPLACEMENT

Inspect the bearing for play or damage.
The bearing must be replaced if it is noisy or damaged, or has excessive play.

Remove the inner bearing with the following tools:

Bearing remover, 17 mm	07936—3710300
Remover handle	07936—3710100
Remover weight	07741—0010201 or 07936—3710200

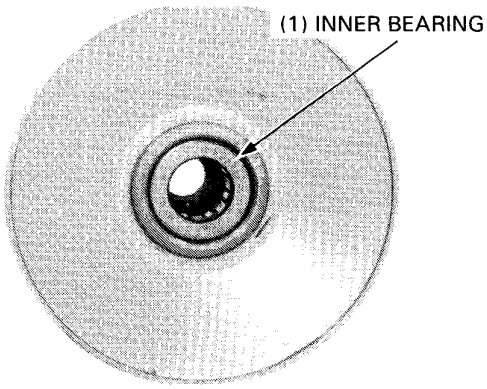

Remove the snap ring, and then the outer bearing.

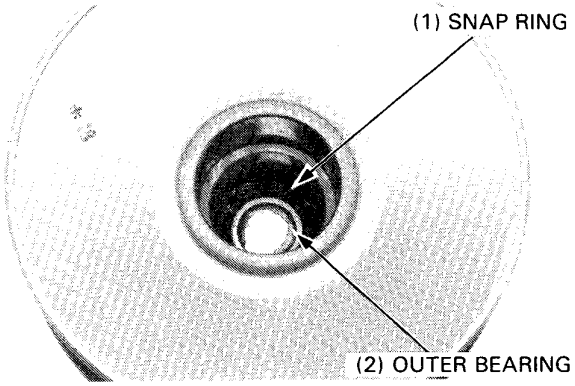

Drive in a new outer bearing with its sealed side facing down.
Install the snap ring.
Apply 4.0—5.0g (0.14—0.16 oz) of grease to the inside of the driven face.

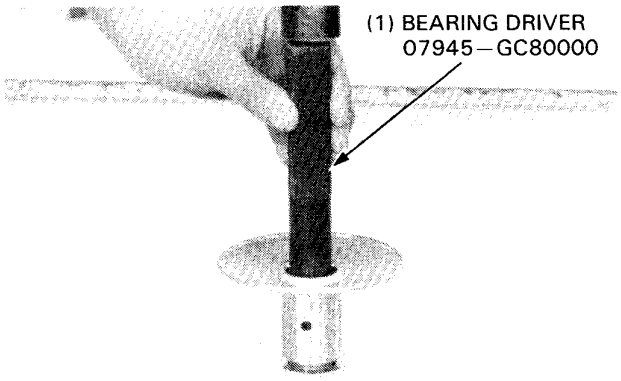

Drive in the new inner bearing with its mark side facing up.

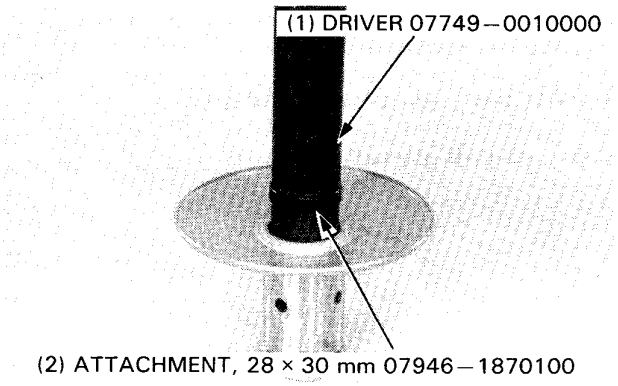

CLUTCH/DRIVEN PULLEY ASSEMBLY

Lubricate the inside of the movable driven face with 3.5–4.0g (0.12–0.14 oz) of grease, then install O-rings and oil seals onto the movable driven face.
Assemble the movable driven face on the driven face assembly, then install the guide pins.

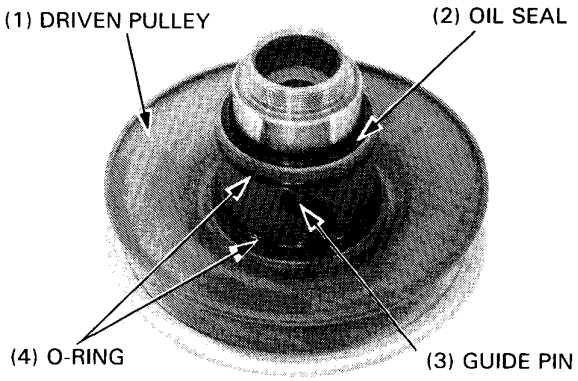

Install the seal collar.

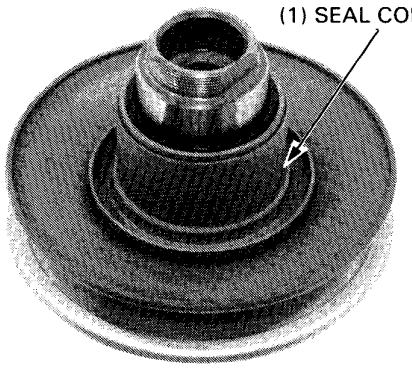

Position the driven face assembly, spring and drive plate assembly on the clutch spring compressor.
Compress the spring by turning the handle.
Install and tighten the 28 mm special nut.

Use a beam type torque wrench 12–14 inches long.

TORQUE WRENCH READING:
33–38 N·m (3.3–3.8 kg-m, 24–28 ft-lb)

ACTUAL TORQUE APPLIED:
35–40 N·m (3.5–4.0 kg-m, 25–29 ft-lb)

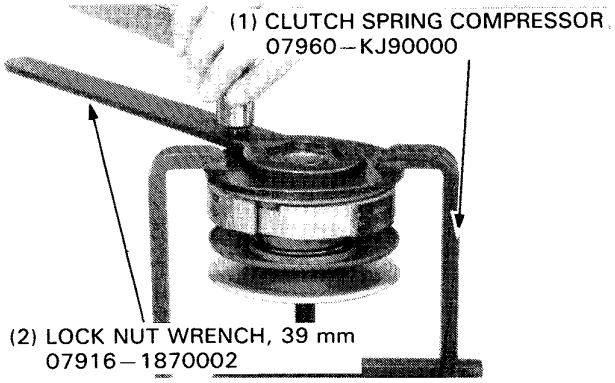

CLUTCH/DRIVEN PULLEY INSTALLATION

Install the driven pulley onto the drive shaft.

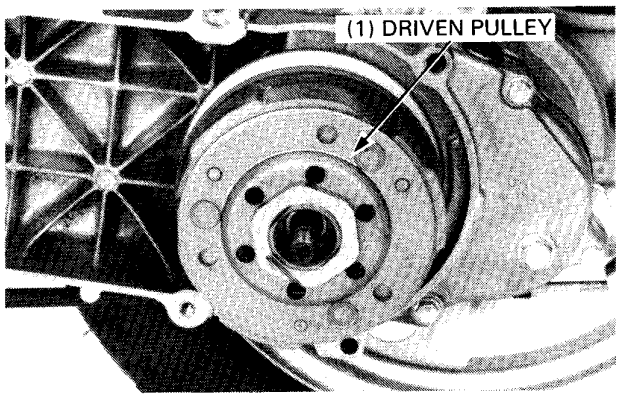

Install the clutch outer and hold it with the universal holder. Install the nut and tighten it.

TORQUE: 35—40 N·m (3.5—4.0 kg-m, 25—29 ft-lb)

Install the remaining parts in the reverse order of removal.

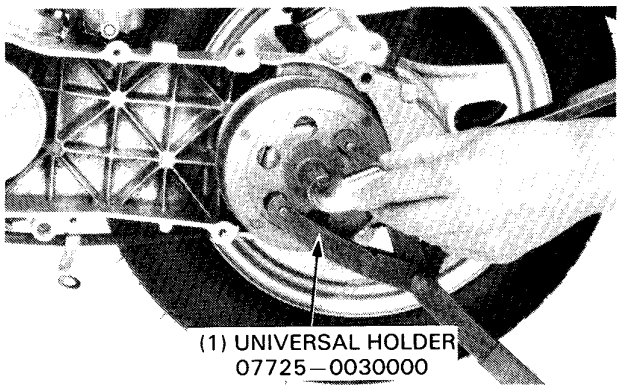

STARTER PINION

Remove the following parts:
- both frame rear covers (page 11-2).
- left crankcase cover (page 8-2).
- starter driven gear (page 8-2).
- starter pinion holder.
- starter pinion.

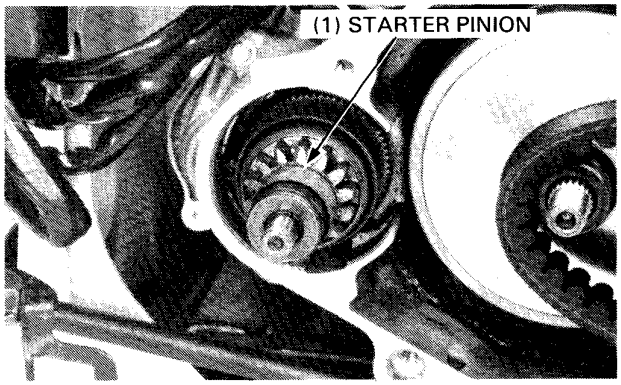

Check the starter pinion gear and sliding surfaces for wear or damage.
Check the starter pinion for smooth operation.

Apply grease to each sliding portion and install the pinion in the reverse order of removal.

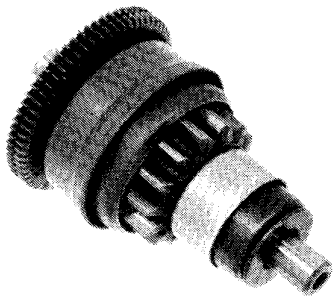

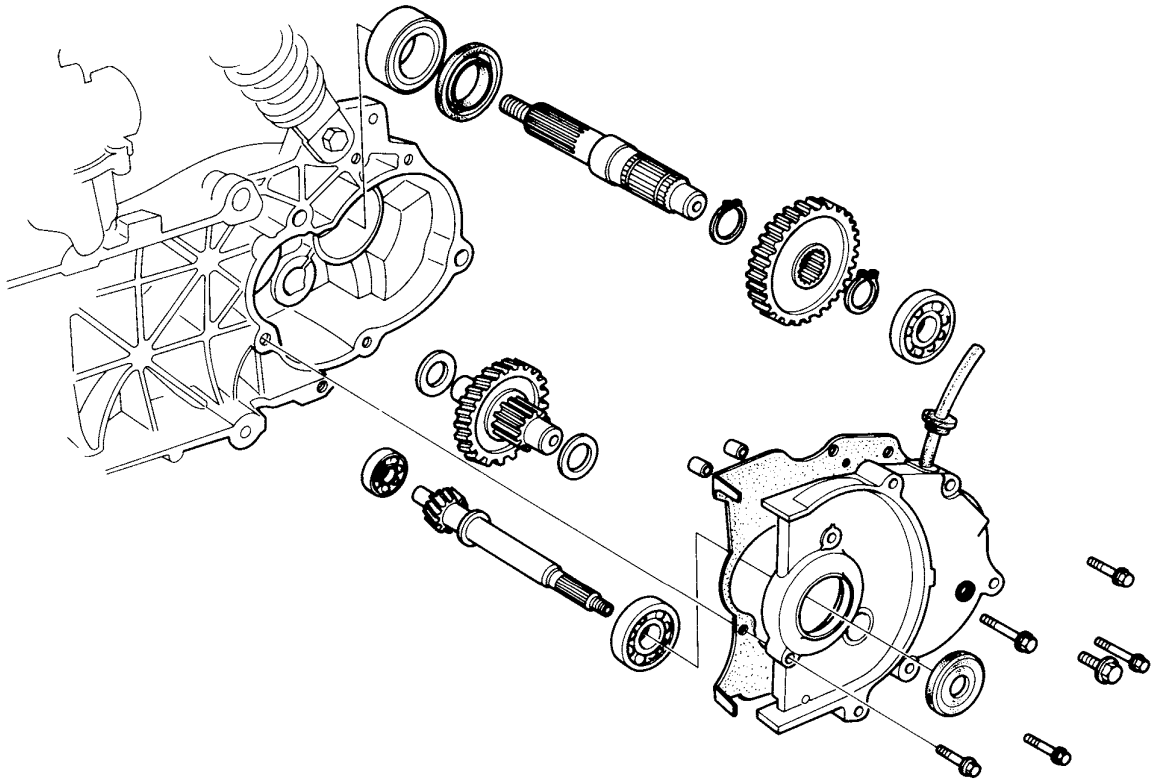

9. FINAL REDUCTION

SERVICE INFORMATION	9-1	FINAL REDUCTION INSPECTION	9-2
TROUBLESHOOTING	9-1	FINAL REDUCTION ASSEMBLY	9-5
FINAL REDUCTION DISASSEMBLY	9-2		

SERVICE INFORMATION

SPECIFICATIONS

Specified oil	Honda 4-stroke oil SAE 10W–40 or equivalent
Oil quantity	90 cc (3.0 US oz., 2.5 Imp. oz.)

TOOLS

Special

Bearing remover, 15 mm	07936–KC10500
Remover handle	07936–3710100
Bearing remover, 12 mm	07936–1660100
Bearing remover weight	07741–0010201 or 07936–3710200
Assembly collar	07965–1480100
Assembly bolt	07965–1480200

Common

Driver	07749–0010000
Attachment, 32 x 35 mm	07746–0010100
Pilot, 12 mm	07746–0040200
Attachment, 37 x 40 mm	07746–0010200
Pilot, 15 mm	07746–0040300
Pilot, 17 mm	07746–0040400

TROUBLESHOOTING

Engine starts, but scooter won't move
- Damaged transmission
- Seized or burnt belt

Abnormal noise
- Worn, seized or chipped gears
- Worn bearing

Oil leaks
- Oil level too high
- Worn or damaged oil seal

FINAL REDUCTION DISASSEMBLY

Remove the driven pulley (page 8-5).
Remove the rear wheel (page 13-2).
Place an oil drain pan under the final reduction case to catch the oil, then remove the transmission cover bolts and cover.
Remove the two dowel pins and the gasket.

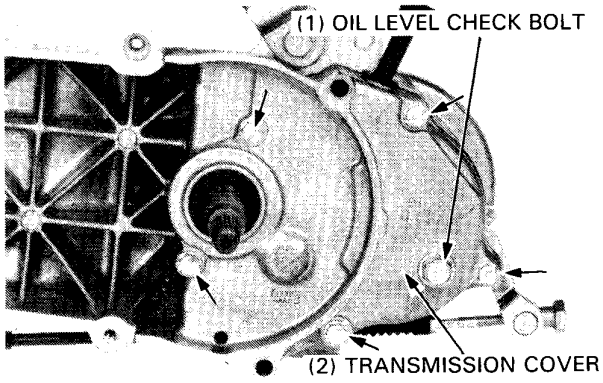

Remove the thrust washer from the countershaft and the circlip from the final shaft.
Remove the final gear and final shaft.
Remove the countershaft, counter gear and inner thrust washer.

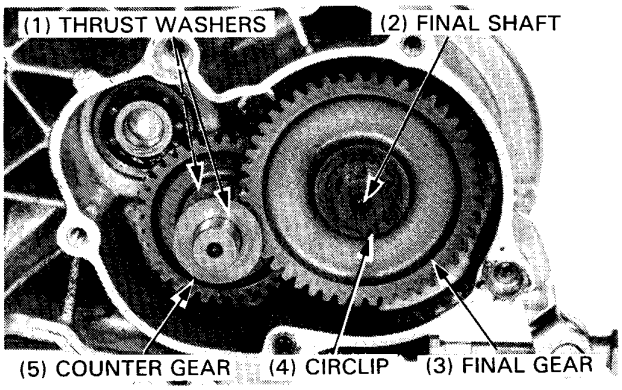

FINAL REDUCTION INSPECTION

Inspect the driveshaft and gear for excessive wear or damage.

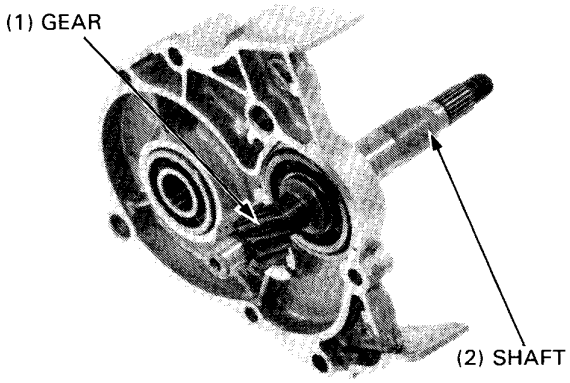

Check the countershaft and gear for excessive wear or damage.
Check the final gear for wear, damage or signs of seizure.

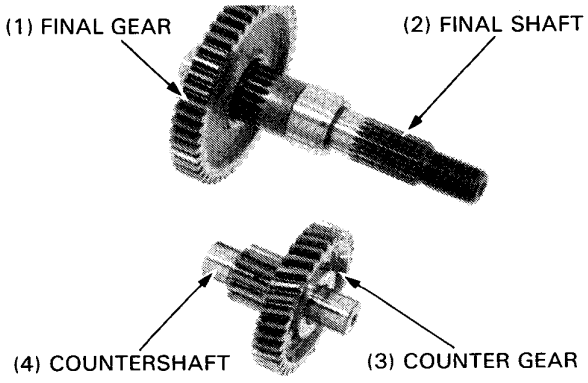

DRIVESHAFT REMOVAL

Use a hydraulic press to remove the driveshaft from the transmission cover.

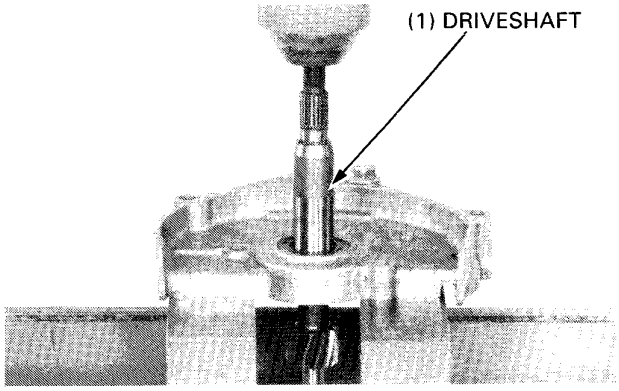

TRANSMISSION BEARING REPLACEMENT

Check the transmission cover final shaft bearing, driveshaft bearing and oil seal for damage.
Replace if necessary.

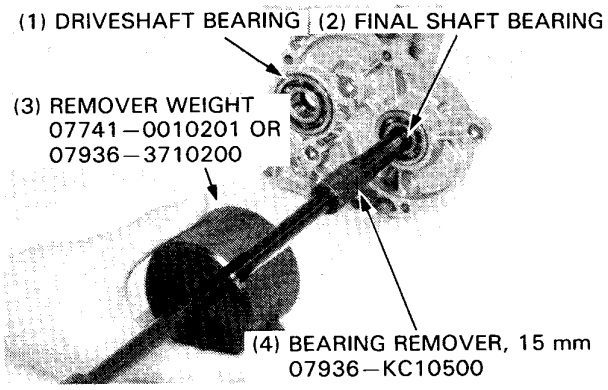

Check the left crankcase driveshaft bearing, oil seal and final shaft bearing for damage.
Replace if necessary.

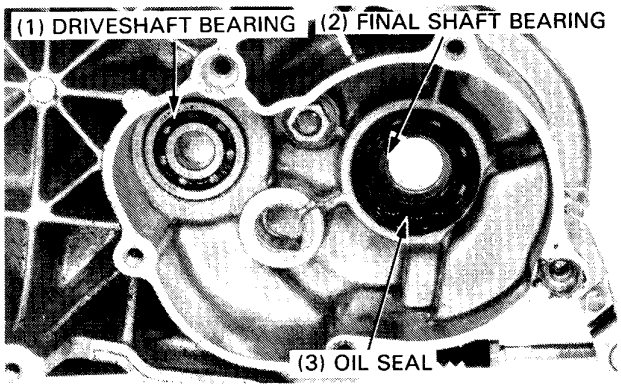

Remove the driveshaft bearing from the left crankcase using the special tools.

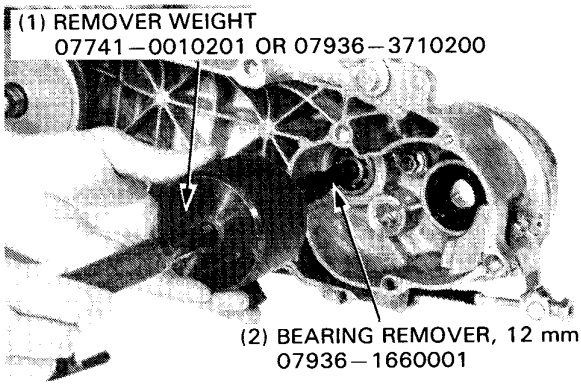

Drive a new driveshaft bearing into the left crankcase.

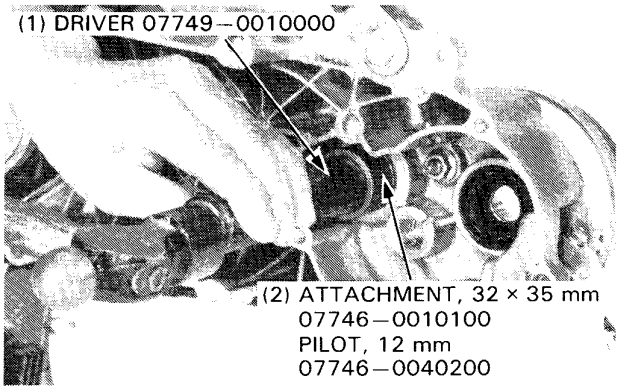

Drive a new final shaft bearing into the left crankcase, then install the oil seal.

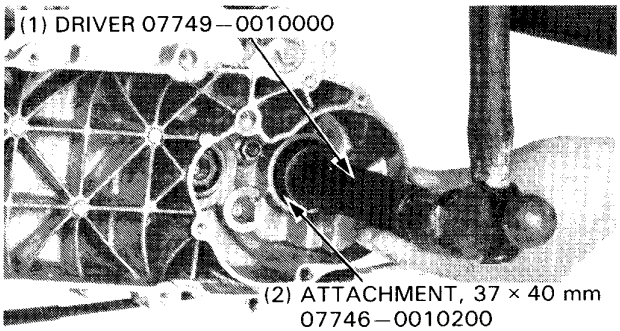

Drive a new final shaft bearing into the transmission cover.

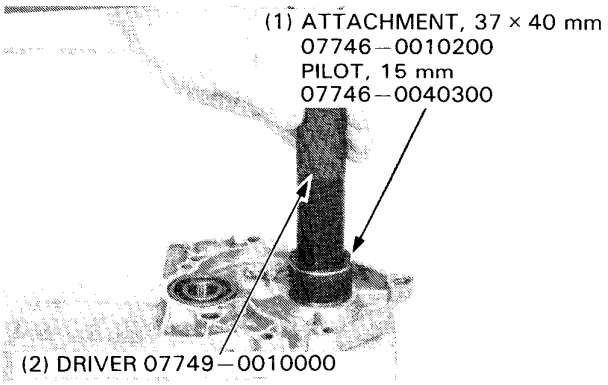

Drive a new driveshaft bearing into the transmission cover.

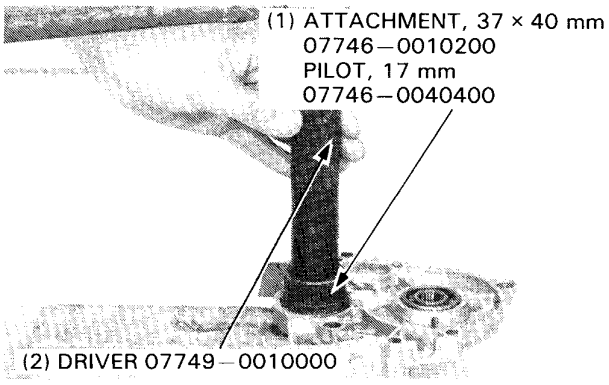

FINAL REDUCTION ASSEMBLY

Insert the driveshaft into the driveshaft bearing in the cover from the left side.

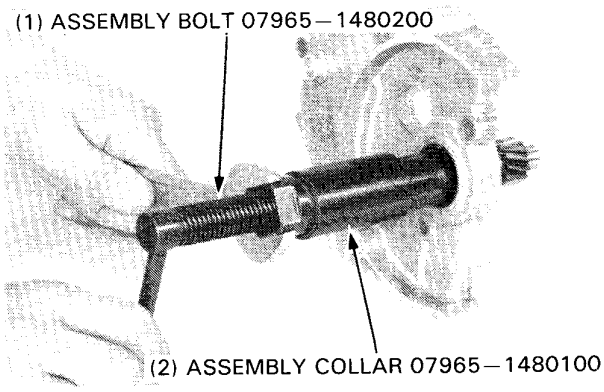

Install the oil seal.

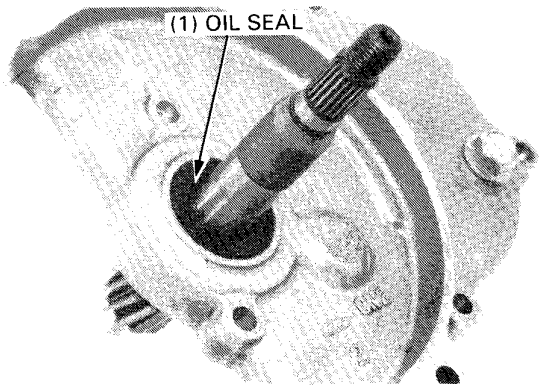

Assemble the inner thrust washer and counter gear onto the countershaft, then install them in the left crankcase.
Install the final shaft and final gear in the case.
Install the thrust washer onto the countershaft and the circlip onto the final shaft, as shown.

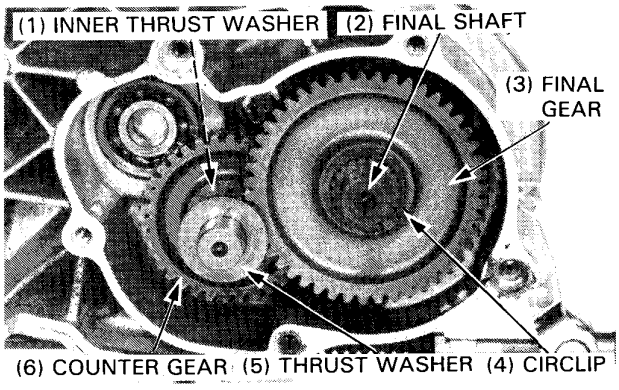

Install a new gasket and dowel pins.

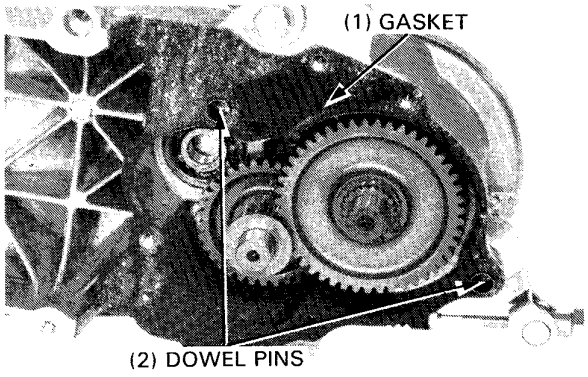

Install the following:
- transmission cover.
- driven pulley/clutch (page 8-11).
- drive pulley, drive belt and left crankcase cover (pages 8-4, 5).
- rear wheel (page 13-2).

Pour the specified amount of oil through the filler opening.

SPECIFIED OIL: HONDA 4 STROKE OIL
10W—40 or equivalent

QUANTITY: 90 cc (3.0 U.S. oz., 2.5 Imp. oz.)

Start the engine and check for leaks.

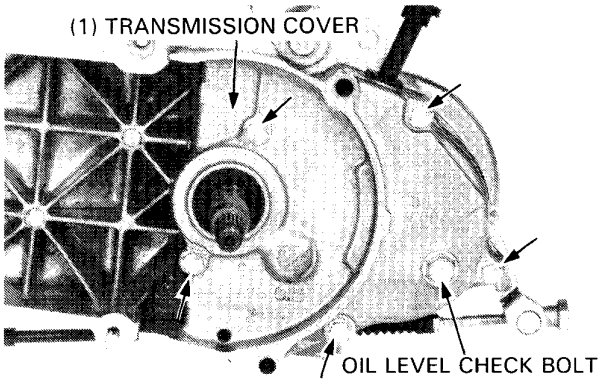

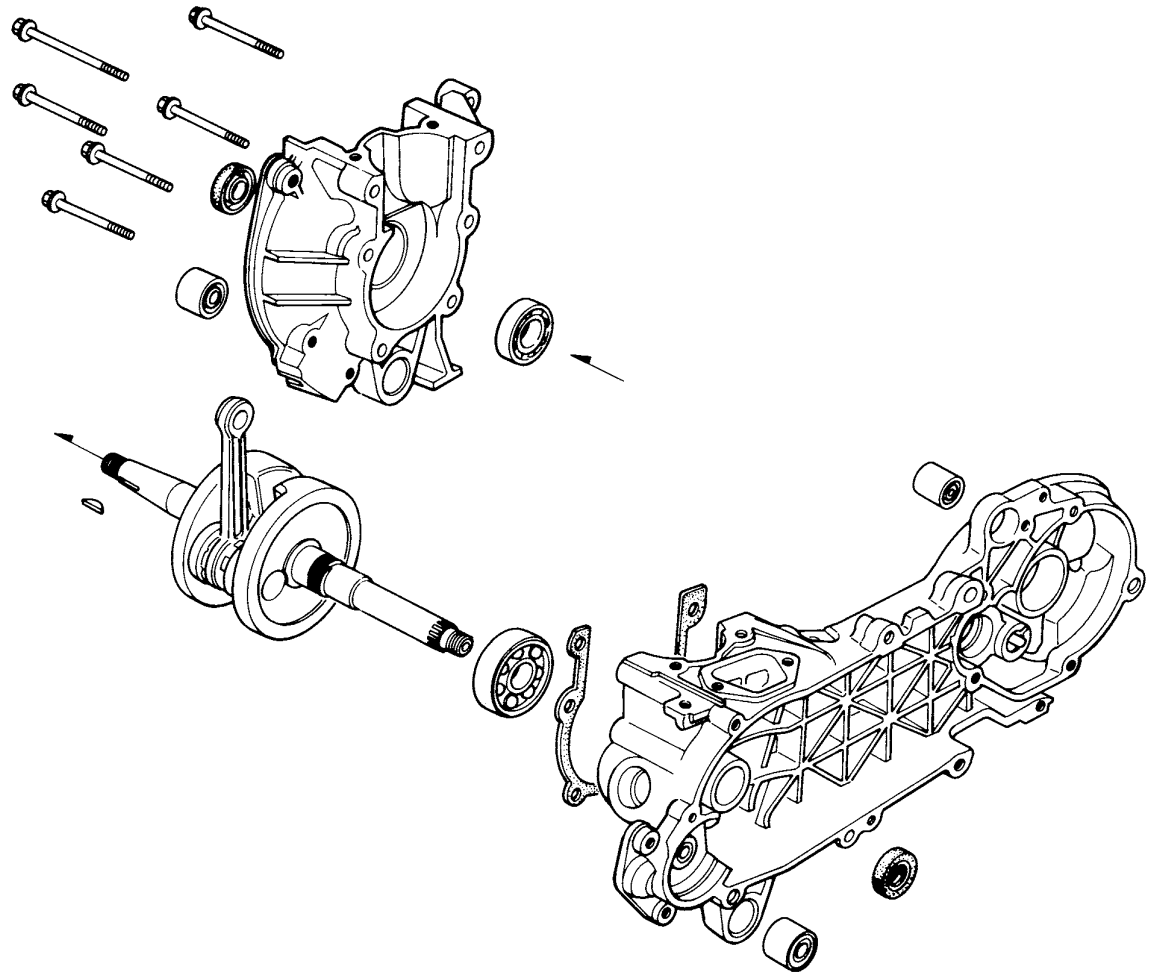

10. CRANKCASE/CRANKSHAFT

SERVICE INFORMATION	10-1	CRANKSHAFT INSPECTION	10-2
TROUBLESHOOTING	10-1	CRANKSHAFT ASSEMBLY	10-4
CRANKCASE SEPARATION	10-2	CRANKCASE ASSEMBLY	10-5
CRANKSHAFT REMOVAL	10-2		

SERVICE INFORMATION

GENERAL

- This section covers crankcase separation to service the crankshaft.
- The following parts must be removed before separating the crankcase:
  - Engine (Section 5)
    - Mounting bracket
  - Carburetor (Section 4)
  - Oil pump (Section 2)
  - Reed valve (Section 4)
  - Alternator (Section 7)
  - Cylinder head, cylinder (Section 6)
  - Starter motor (Section 14)
- In addition to the above, remove the following parts when the left crankcase half must be removed:
  - Rear wheel (Section 13)
  - Final reduction (Section 9)

SPECIFICATIONS

ITEM	STANDARD mm (in)	SERVICE LIMIT mm (in)
Connecting rod big end side clearance	—	0.5 (0.02)
Connecting rod big end radial clearance	—	0.04 (0.0016)
Crankshaft runout A	—	0.15 (0.006)
B	—	0.10 (0.004)

TOOLS

Special

Universal bearing puller	07631—0010000 or Commercially available in U.S.A.
Case puller	07935—KG80000
Case puller	07935—GK80000
Assembly collar	07965—1480100
Assembly bolt	07965—1480200

Common

Attachment, 37 x 40 mm	07746—0010200
Pilot, 17 mm	07746—0040400
Attachment, 42 x 47 mm	07746—0010300
Pilot, 20 mm	07746—0040500
Driver	07749—0010000

TROUBLESHOOTING

Abnormal engine noise

- Worn main journal bearing
- Worn crankpin bearing
- Worn transmission bearing

CRANKCASE SEPARATION

Remove the crankcase attaching bolts.

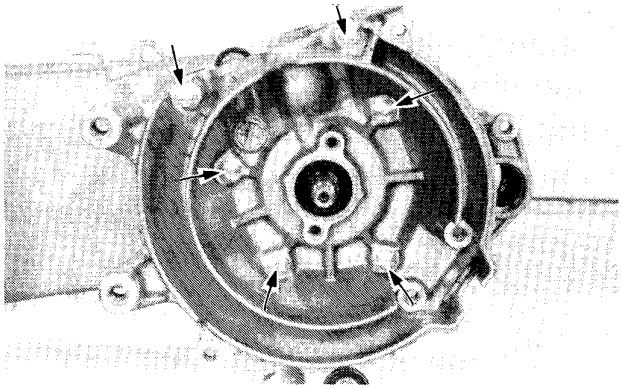

Attach the special tool on the right crankcase as shown. Separate the right crankcase half.

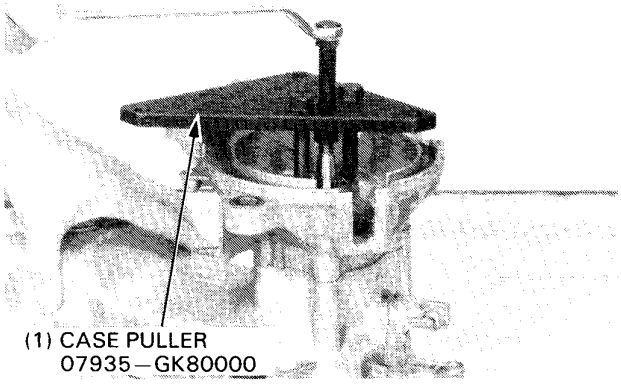

CRANKSHAFT REMOVAL

Use a hydraulic press or case puller 07935—KG80000 to remove the crankshaft.

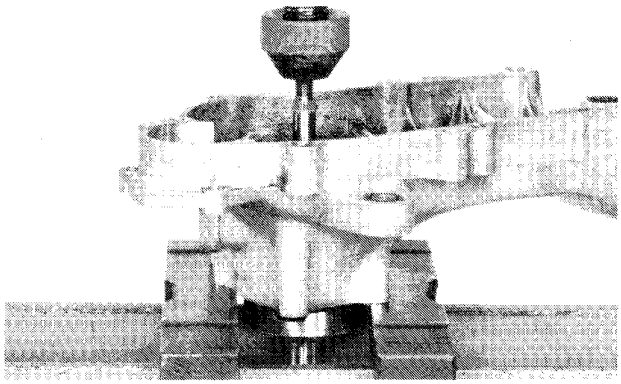

CRANKSHAFT INSPECTION

Measure the connecting rod big end side clearance with a feeler gauge.

SERVICE LIMIT: 0.5 mm (0.02 in)

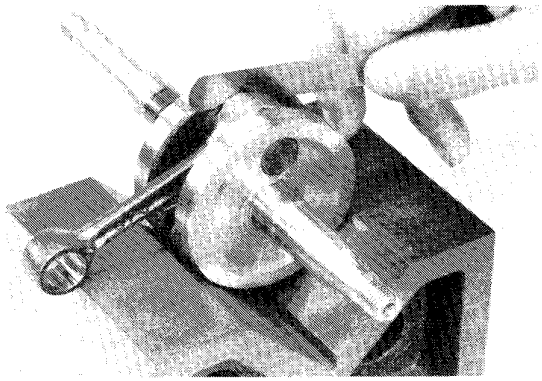

Measure the connecting rod big end radial clearance at two points in the X and Y directions.

SERVICE LIMIT: 0.04 mm (0.0016 in)

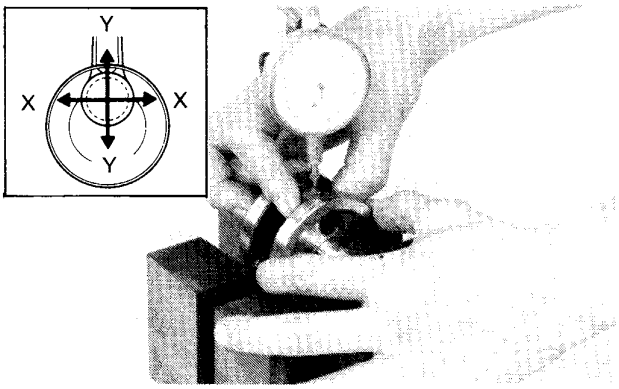

Set the crankshaft on a stand or V-blocks and read runout using a dial gauge.

SERVICE LIMITS:
A: 0.15 mm (0.006 in)
B: 0.10 mm (0.004 in)

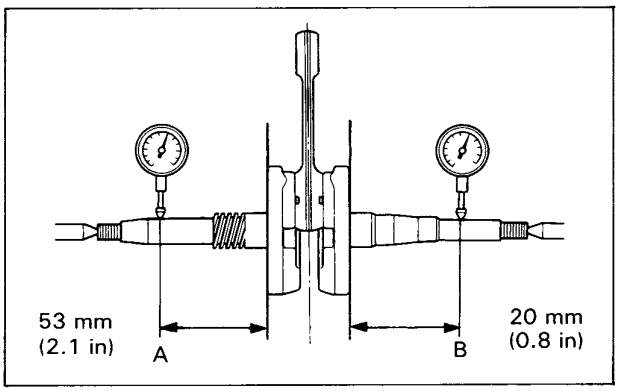

Spin the crankshaft bearing by hand and check for play.
The bearing must be replaced if it is noisy or has excessive play.

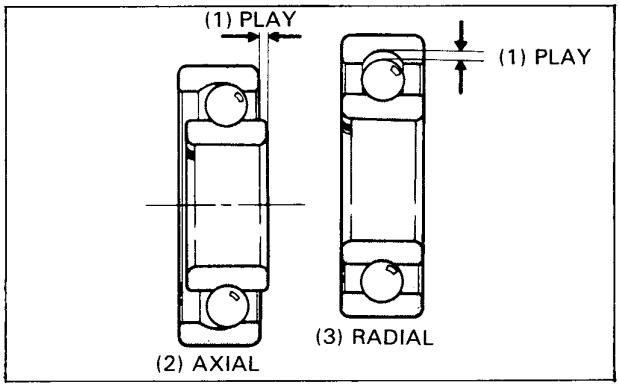

CRANKSHAFT BEARING REPLACEMENT

Remove the crankshaft bearing from the crankshaft.

Remove the oil seals from the right and left crankcase.

Drive out the crankcase bearings.

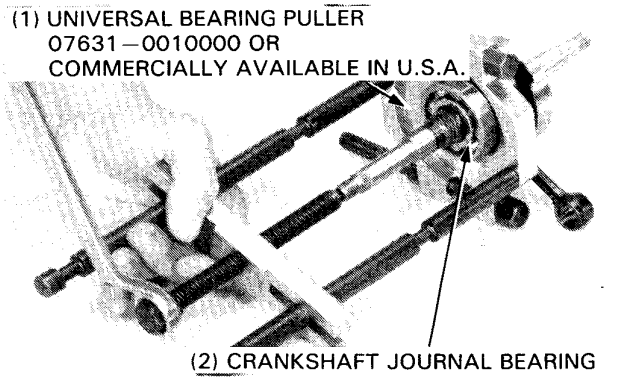

Drive a new crankshaft bearing into the left crankcase.

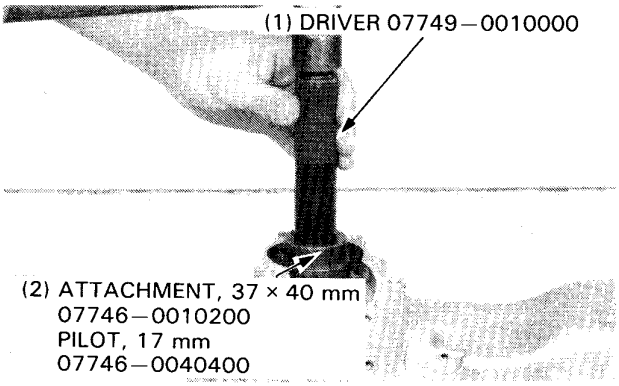

Drive a new crankshaft bearing into the right crankcase.

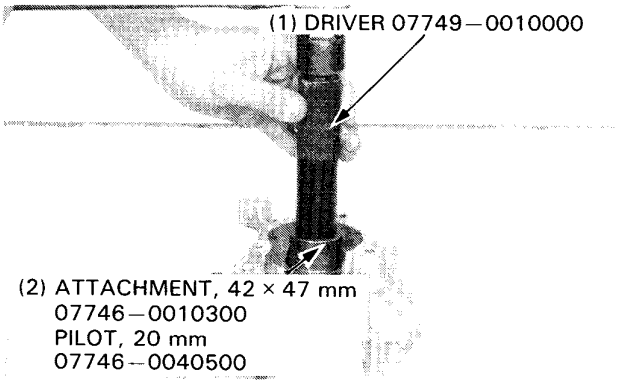

CRANKSHAFT ASSEMBLY

Wash the crankshaft in solvent and blow dry with compressed air. Check for cracks or other faults.

Apply clean 2-stroke injector oil to all moving and sliding surfaces.
Remove all gasket material from the crankcase mating surfaces. Dress any roughness or irregularities with an oil stone.

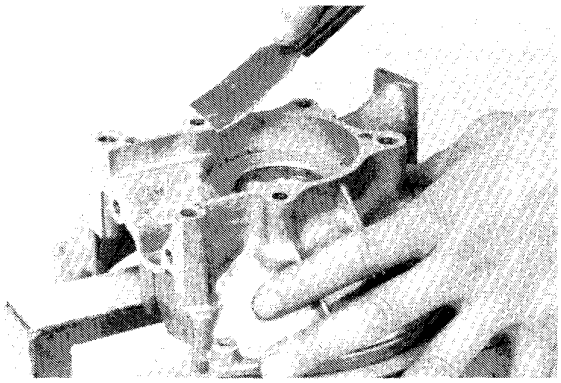

Install the crankshaft into the left crankcase.
Position the assembly collar's small O.D. against the crankshaft bearing. Thread the assembly bolt onto the crankshaft. Hold the bolt and turn the nut to install the crankshaft into the left crankcase.

Lubricate the crankshaft main and journal bearings with Honda 2-stroke oil or equivalent.

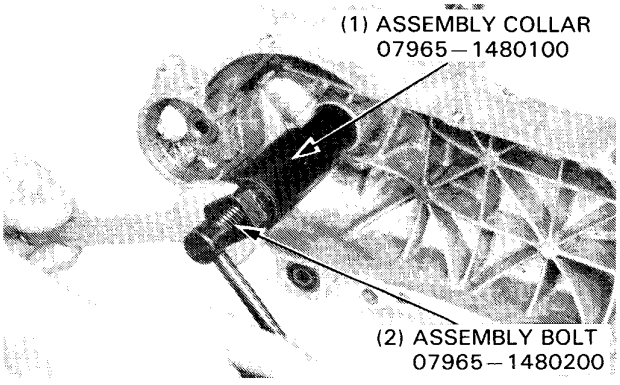

Install a new left crankshaft oil seal using the opposite side of the assembly collar as shown.

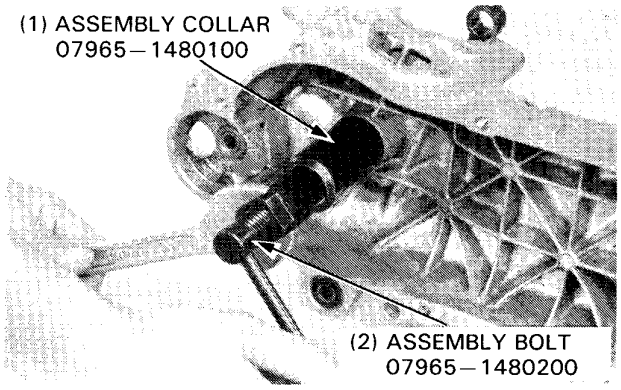

CRANKCASE ASSEMBLY

Install a new gasket and the dowel pins onto the crankcase mating surface.

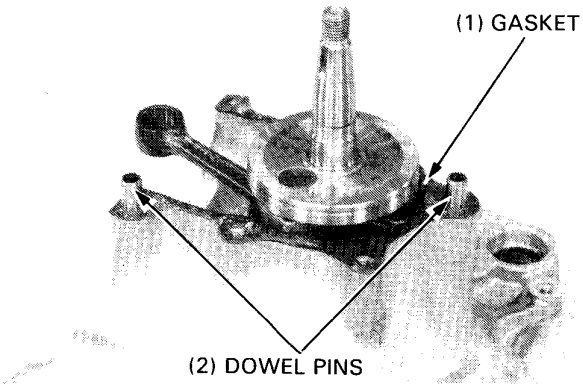

Assemble the crankcase halves; place the collar with the small O.D. against the right crankshaft bearing.
Thread the bolt through the collar onto the crankshaft. Hold the bolt and turn the nut clockwise to draw the crankcase halves together.

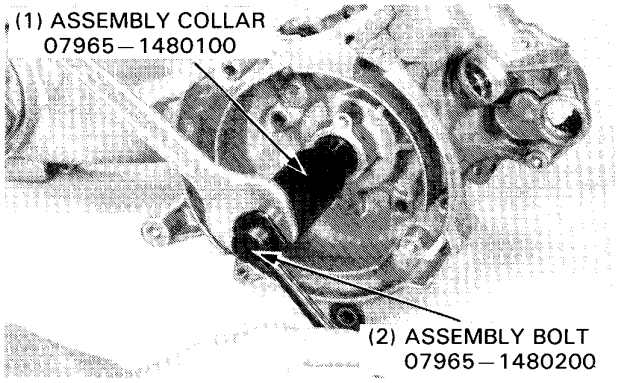

Install a new right crankshaft oil seal using the same tool until it is 9mm (0.35 in) below the surface of the right crankcase as shown.

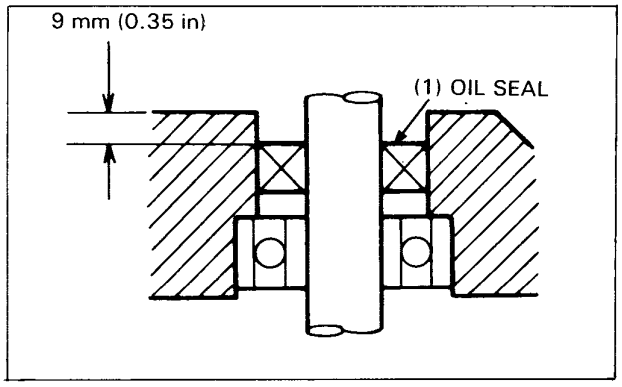

Install the crankcase attaching bolts.
Install the removed parts in the reverse order of removal.

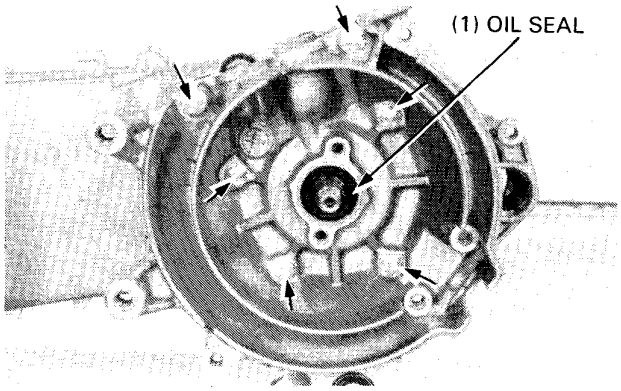

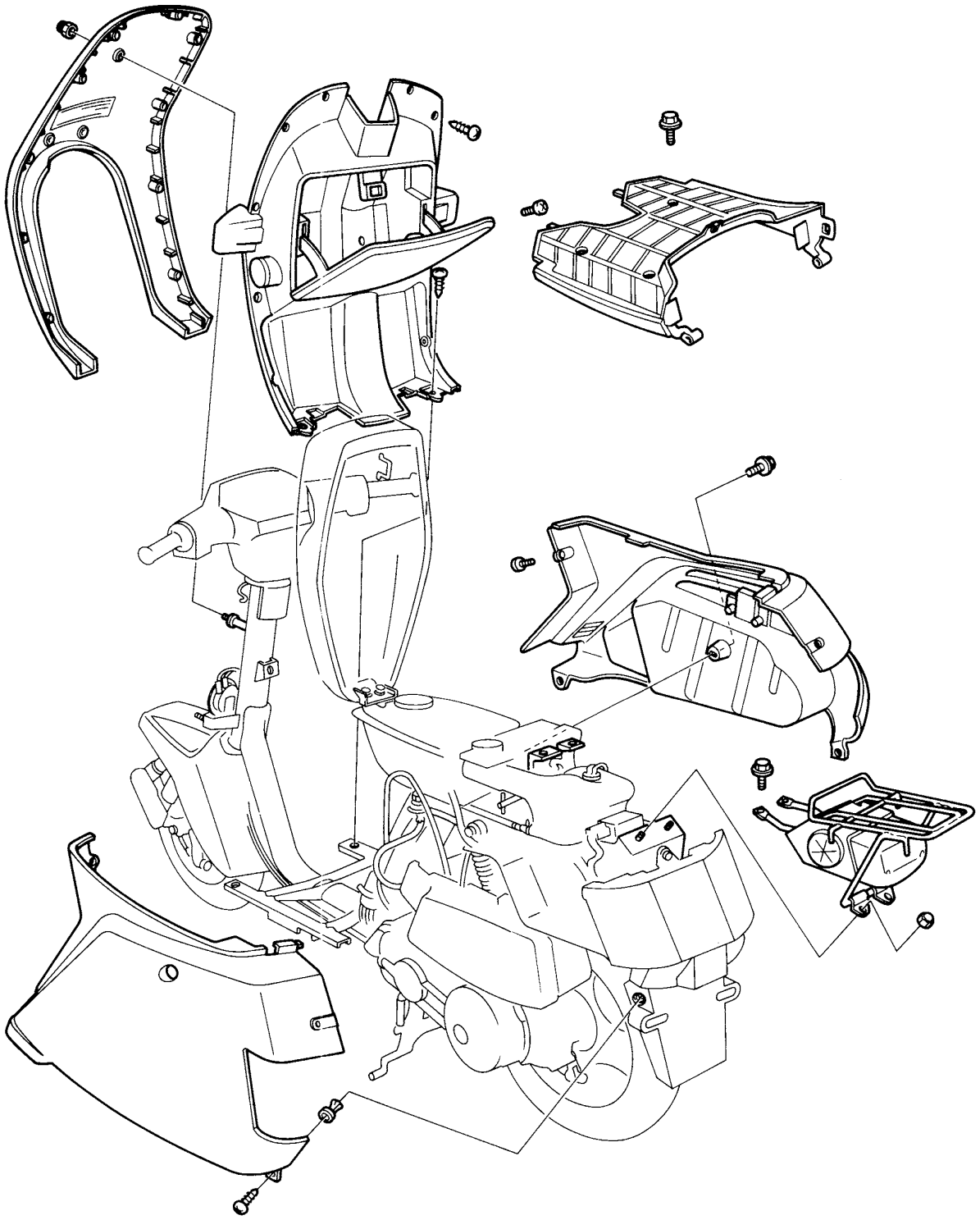

11. FRAME COVERS

SERVICE INFORMATION	11-1	FLOOR BOARD	11-3
FRAME REAR COVERS	11-2	LEG SHIELD	11-3
FRONT COVER	11-2		

SERVICE INFORMATION

GENERAL

- This section covers the removal and installation of the frame covers (right and left rear covers, front cover, floor board and leg shield).
- When installing the covers, align each locking tab properly and be careful not to pinch the wires.

FRAME REAR COVERS

REMOVAL

Release the seat using the ignition key.

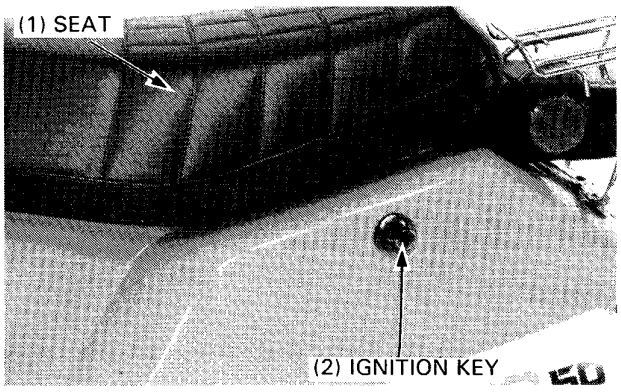

Disconnect the taillight wire connectors.
Remove the carrier and taillight assembly by removing the two bolts and two cap nuts.
Remove the cap nut and the two screws securing the left frame rear cover.
Remove the left frame rear cover.

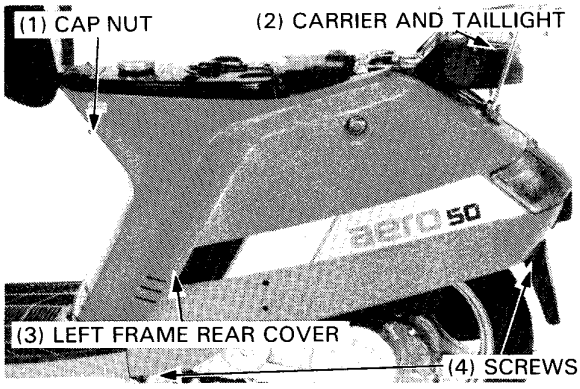

Open the rear trunk cover using the ignition key.
Remove the bolt and two screws and remove the right frame rear cover.

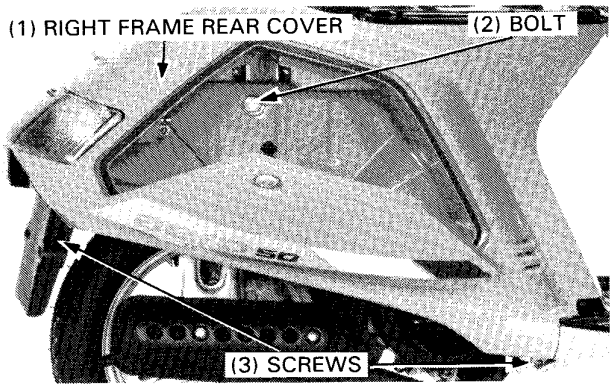

INSTALLATION

Install the right and left frame rear covers in the reverse order of removal.

FRONT COVER

REMOVAL

Remove the ten screws securing the leg shield to the front cover.

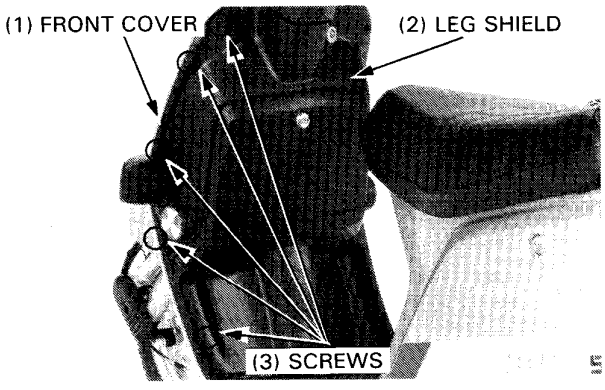

Remove the three front cover cap nuts and the front cover.

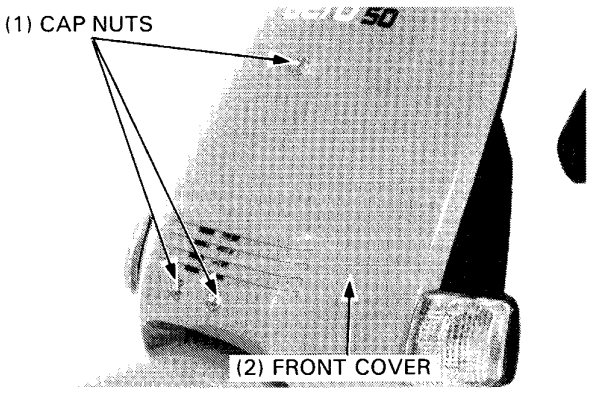

INSTALLATION

Install the front cover in the reverse order of removal.

FLOOR BOARD

REMOVAL

Remove the frame rear covers (page 11-2).
Remove the four bolts and the floor board.

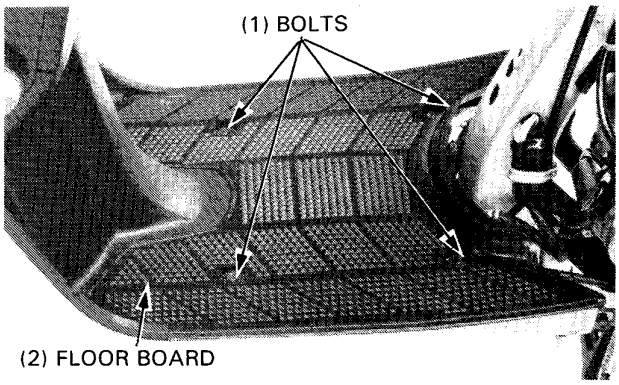

INSTALLATION

Install the floor board in the reverse order of removal.

LEG SHIELD

Remove the following:
- frame rear covers (page 11-2).
- floor board.
- front cover (page 11-2).

Disconnect the front turn signal wire connectors.
Remove the multi-coupler holder by removing the screw.
Remove the turn signal relay from the bracket on the leg shield.

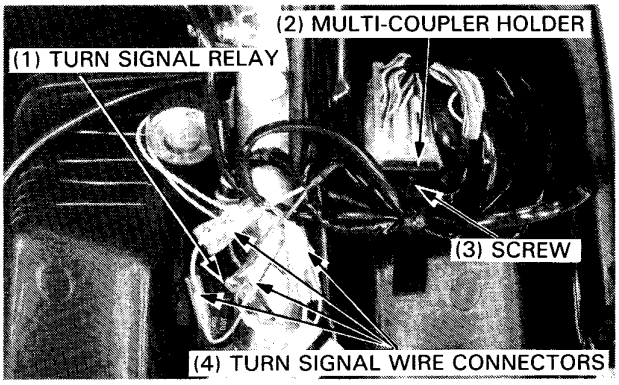

Open the front trunk using the ignition key.
Remove the two screws and bolt, and remove the leg shield.

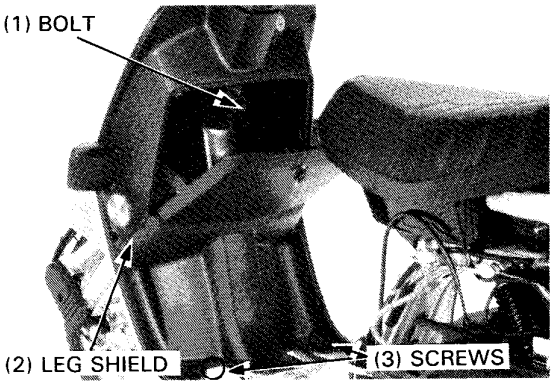

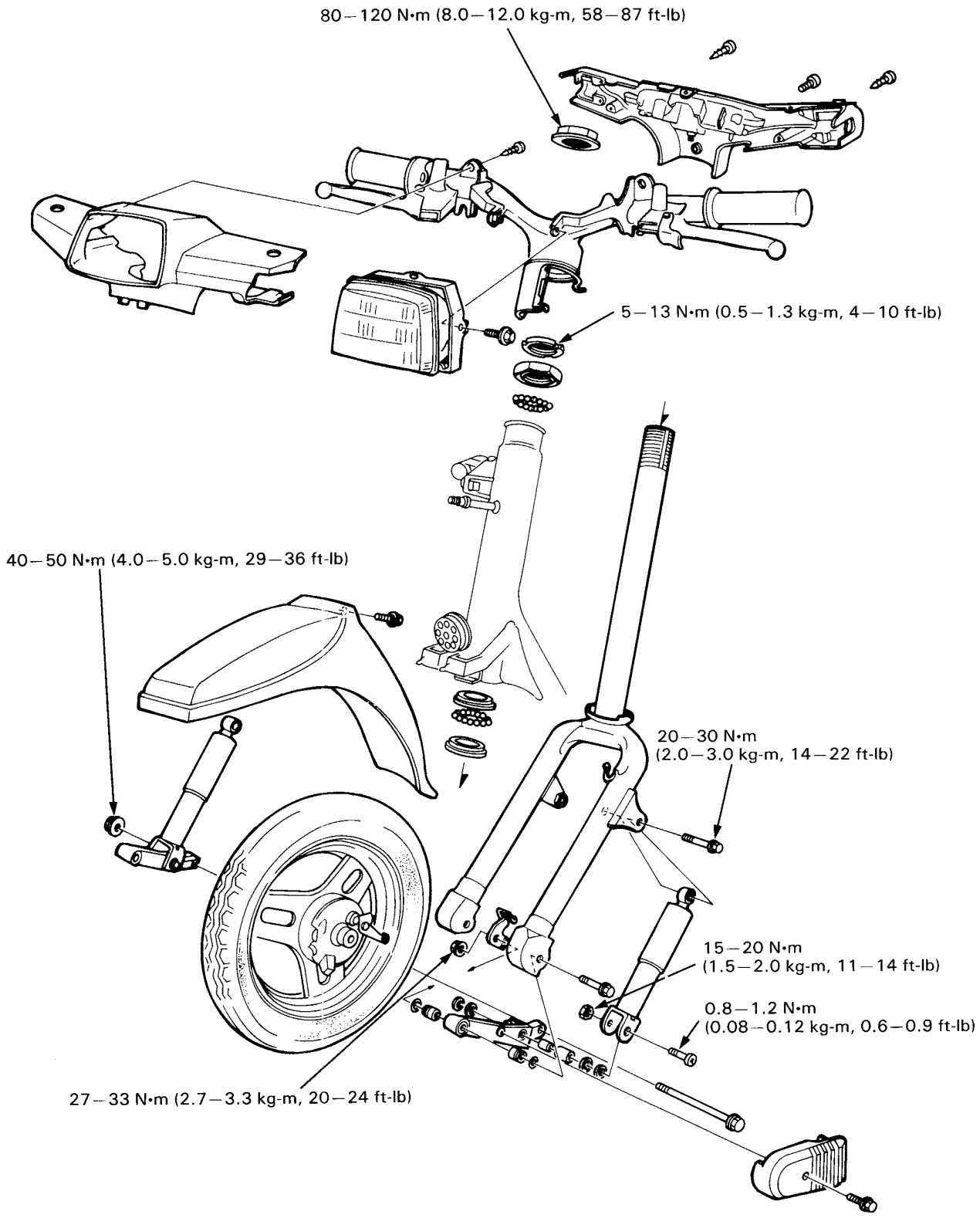
80—120 N•m (8.0—12.0 kg-m, 58—87 ft-lb)
5—13 N•m (0.5—1.3 kg-m, 4—10 ft-lb)
40—50 N•m (4.0—5.0 kg-m, 29—36 ft-lb)
20—30 N•m
(2.0—3.0 kg-m, 14—22 ft-lb)
15—20 N•m
(1.5—2.0 kg-m, 11—14 ft-lb)
0.8—1.2 N•m
(0.08—0.12 kg-m, 0.6—0.9 ft-lb)
27—33 N•m (2.7—3.3 kg-m, 20—24 ft-lb)

12. STEERING/FRONT WHEEL/BRAKE/SUSPENSION

SERVICE INFORMATION	12-1	FRONT BRAKE	12-7
TROUBLESHOOTING	12-2	PIVOT ARMS	12-10
HANDLEBAR	12-3	FRONT SHOCK ABSORBERS	12-11
FRONT WHEEL	12-5	STEERING STEM	12-13

SERVICE INFORMATION

GENERAL

- Brake dust contains asbestos which can be harmful to your health.
- Do not use compressed air to clean brake drums or brake panels. Use a vacuum with a sealed collector. Wear a protective face mask and thoroughly wash your hands when finished.

SPECIFICATIONS

ITEM		STANDARD mm (in)	SERVICE LIMIT mm (in)
Axle runout		—	0.2 (0.01)
Rim runout	Radial	—	2.0 (0.08)
	Axial	—	2.0 (0.08)
Brake drum I.D.		80.0 (3.15)	80.5 (3.17)
Brake lining thickness		4.0 (0.16)	2.0 (0.08)
Front shock absorber spring free length		172.5 (6.79)	167.3 (6.59)

TORQUE VALUES

Steering stem nut	80—120 N·m (8.0—12.0 kg-m, 58—87 ft-lb)	
Steering stem lock not	5—13 N·m (0.5—1.3 kg-m, 4—10 ft-lb)	
Front axle nut	40—50 N·m (4.0—5.0 kg-m, 29—36 ft-lb)	
Pivot arm bolt/nut	27—33 N·m (2.7—3.3 kg-m, 20—24 ft-lb)	
Shock absorber upper mount bolt	20—30 N·m (2.0—3.0 kg-m, 14—22 ft-lb)	
Shock absorber lower mount bolt	0.8—1.2 N·m (0.08—0.12 kg-m, 0.6—0.9 ft-lb)	
Shock absorber lower mount nut	15—20 N·m (1.5—2.0 kg-m, 11—14 ft-lb)	
Shock absorber damper lock nut	15—25 N·m (1.5—2.5 kg-m, 11—18 ft-lb)	Apply locking agent to the nut threads
Brake arm bolt	4—7 N·m (0.4—0.7 kg-m, 3—5 ft-lb)	

TOOLS

Special

Attachment, 28 x 30 mm	07946—1870100
Lock nut wrench	07916—GK00000
Lock nut wrench	07916—1870100 or Equivalent commercially available in U.S.A.
Shock absorber compressor attachment	07967—GA70101
Shock absorber compressor spring attachment	07967—KM10100

Common

Pilot, 10 mm	07746—0040100
Driver	07749—0010000
Bearing remover shaft	07746—0050100 — or Equivalent commercially available in U.S.A.
Bearing remover head, 10 mm	07746—0050200 —
Attachment, 42 x 47 mm	07746—0010300
Shock absorber compressor	07959—3290001
Lock nut wrench, 30 x 32 mm	07716—0020400 — or Equivalent commercially available in U.S.A.
Extension bar	07716—0020500 —

TROUBLESHOOTING

Hard steering
- Steering stem nut too tight
- Steering top cone race/nut too tight
- Damaged steering balls and races
- Insufficient tire pressure

Steers to one side or does not track straight
- Bent front forks
- Bent front axle
- Bent spoke plate

Front wheel wobbling
- Bent rim
- Axle not tightened properly
- Bent spoke plate
- Excessive wheel bearing play
- Faulty or unevenly worn tire

Soft suspension
- Weak shock absorber springs

Front suspension noise
- Shock absorber spring binding
- Loose front fork fasteners

HANDLEBAR

REMOVAL

Remove the following:
- headlight (page 14-18).
- instruments (page 14-15).
- throttle housing screw and throttle grip.

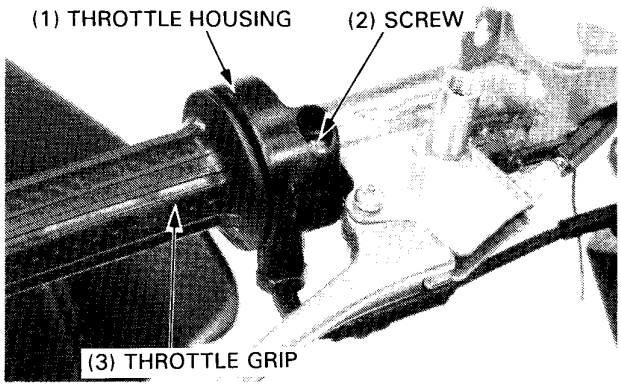

Remove the front and rear brake levers by removing the pivot lock nuts and bolts and disconnecting the brake cables.

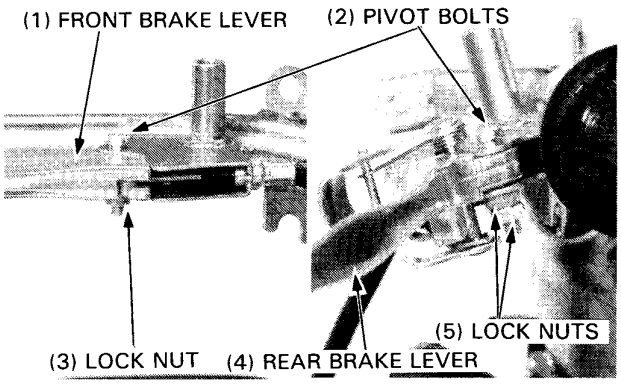

Remove the steering stem nut and the handlebar.

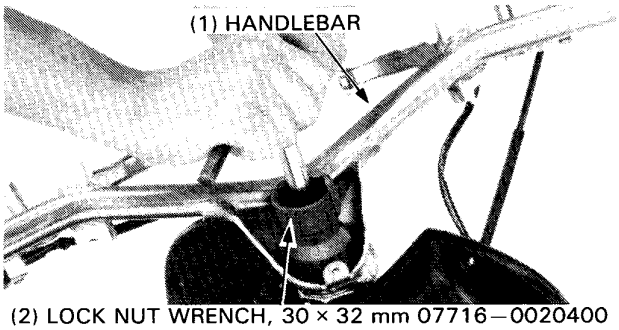

INSTALLATION

Align the tabs on the handlebar with the grooves in the steering stem and install the handlebar.

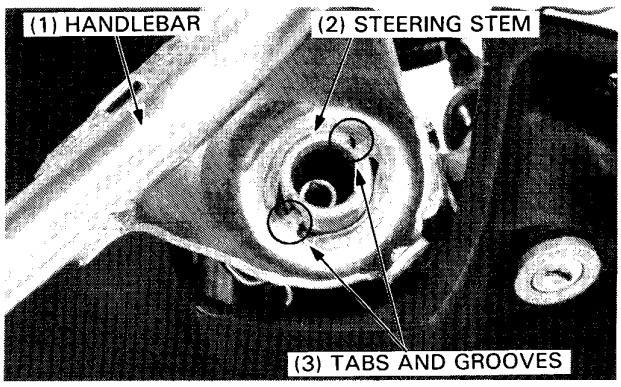

Tighten the steering stem nut.

TORQUE: 80—120 N·m (8.0—12.0 kg-m, 58—87 ft-lb)

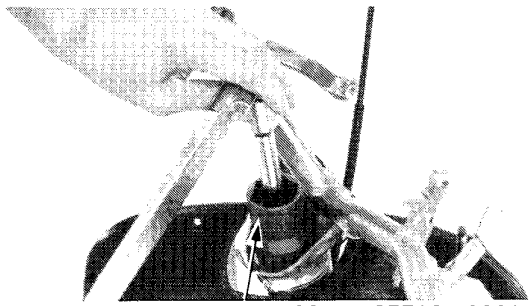

(1) LOCK NUT WRENCH, 30 x 32 mm 07716—0020400
EXTENSION BAR 07716—0020500
OR EQUIVALENT COMMERCIALLY AVAILABLE IN U.S.A.

Connect the brake cables to the levers and install the levers on the brackets using the pivot bolts and lock nuts.

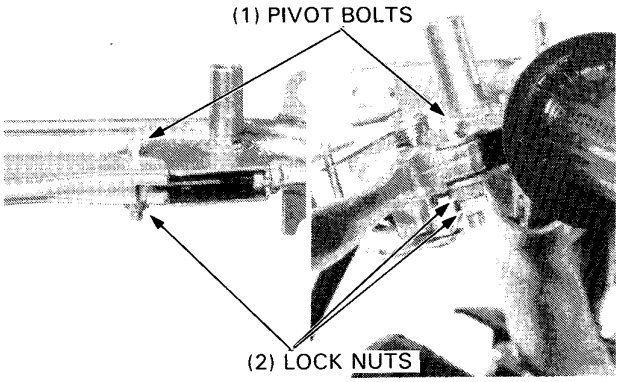

Apply grease to the throttle grip cable end and insert the throttle grip and connect the throttle cable end to the grip.

Align the locating pin on the lower throttle housing with the hole in the handlebar.

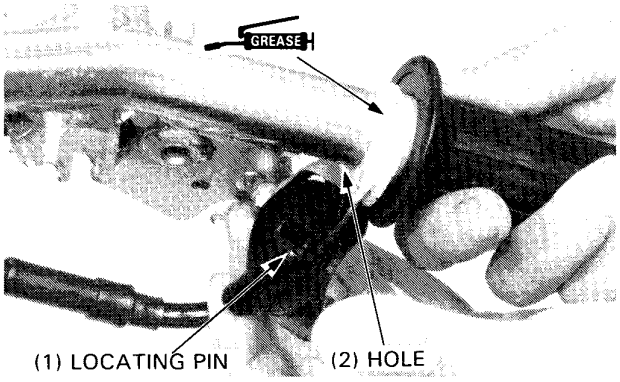

Install the upper throttle housing and tighten the screw.
Install the headlight (page 14-18) and instruments (page 14-16).

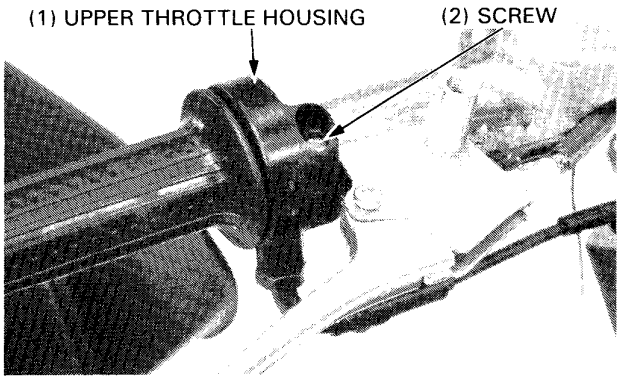

FRONT WHEEL

REMOVAL

Raise the front wheel off the ground by placing a jack or block under the floor board.

Remove the speedometer cable set screw and disconnect the speedometer cable from the brake panel.

Remove the front brake adjusting nut and disconnect the brake cable from the brake arm and panel.

Remove the axle nut.
Pull out the axle and remove the front wheel.

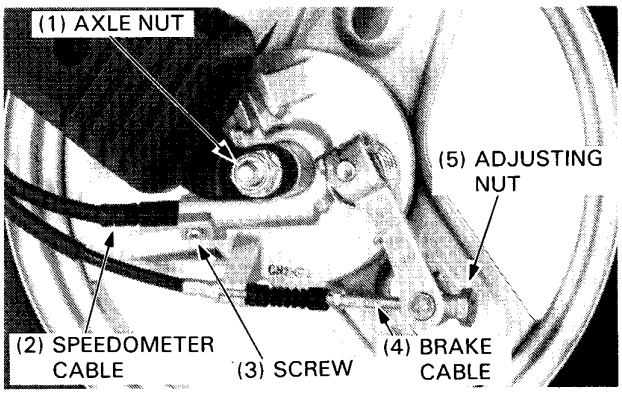

INSPECTION

AXLE

Set the axle in V blocks and measure the runout.

SERVICE LIMIT: 0.2 mm (0.01 in)

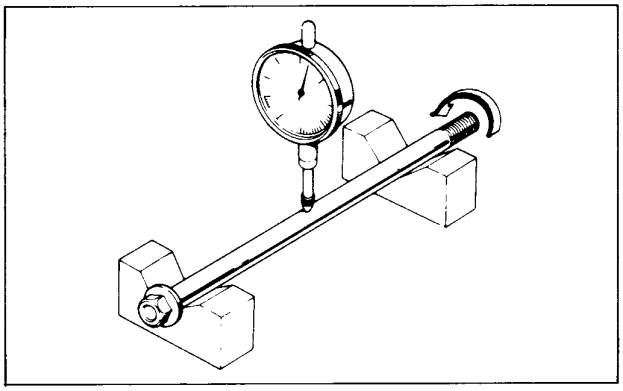

WHEEL BEARING

Check the wheel bearing play by placing the wheel in a truing stand and spinning the wheel by hand.
Replace the bearings if they are noisy or have excessive play.

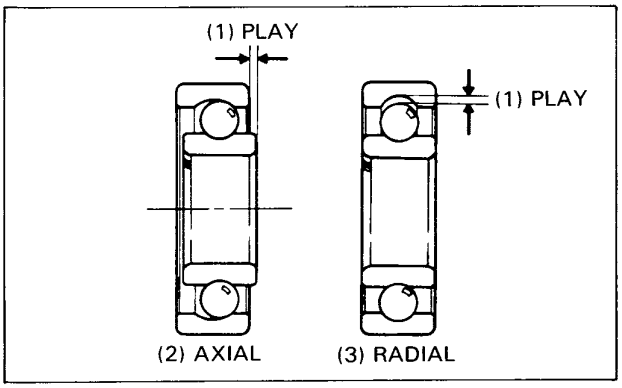

WHEEL RIM

Check the rim runout by placing the wheel in a truing stand. Then spin the wheel by hand and read the runout using a dial indicator.

SERVICE LIMITS:
Radial: 2.0 mm (0.08 in)
Axial: 2.0 mm (0.08 in)

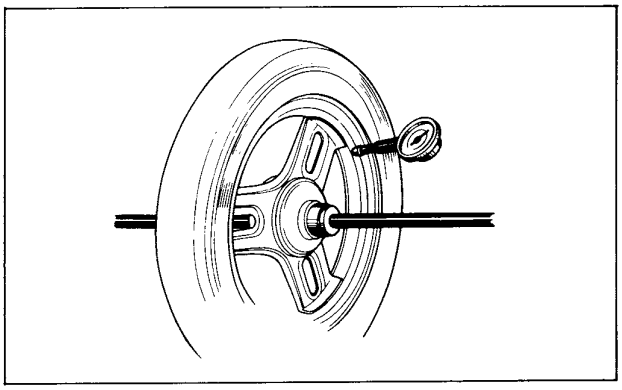

DISASSEMBLY

Remove the axle side collar and dust seal from the wheel hub.

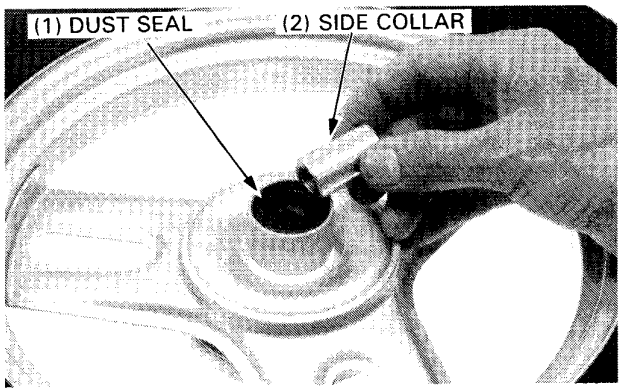

Drive out the wheel bearings and remove the distance collar.

ASSEMBLY

Pack all bearing cavities with grease.
Drive in a new right bearing and install the distance collar.
Drive in a new left bearing.

NOTE

- Install the bearings with their sealed ends facing out.

WARNING

- ***Contaminated brake linings reduce stopping power.***
- ***Keep grease off the linings and brake drum.***

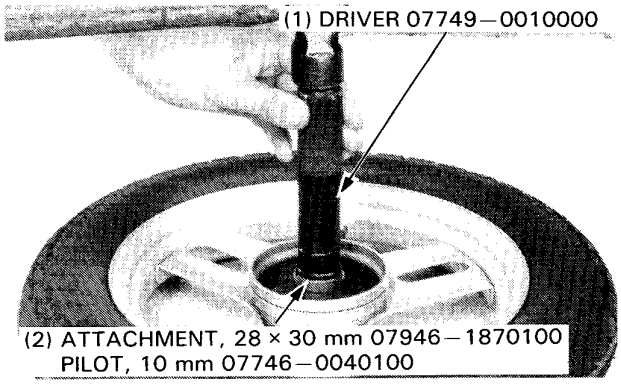

Install a new dust seal.
Apply grease to the inside of the dust seal and install the side collar.

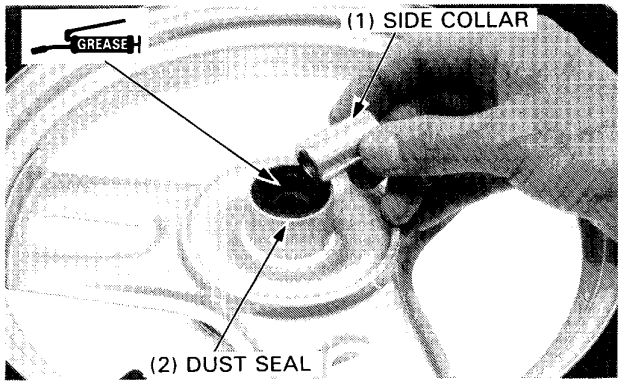

INSTALLATION

Install the brake panel into the wheel hub.
Position the front wheel between the forks and align the tongue of the left pivot arm with the groove in the brake panel.
Insert the axle from the right side.

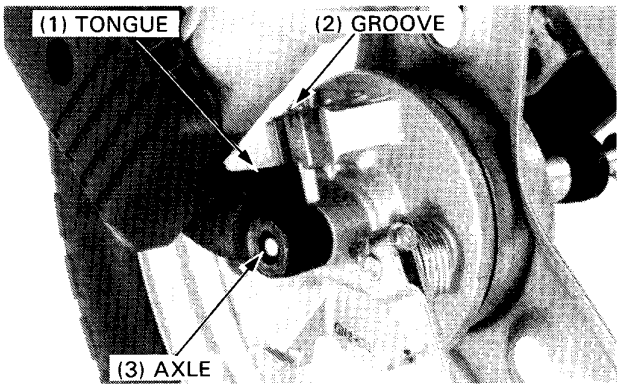

Install and tighten the axle nut.

TORQUE: 40—50 N·m (4.0—5.0 kg-m, 29—36 ft-lb)

Connect the speedometer cable to the brake panel and tighten the set screw.
Connect the brake cable to the brake panel and brake arm and install the adjusting nut.
Adjust the front brake free play (page 3-5).

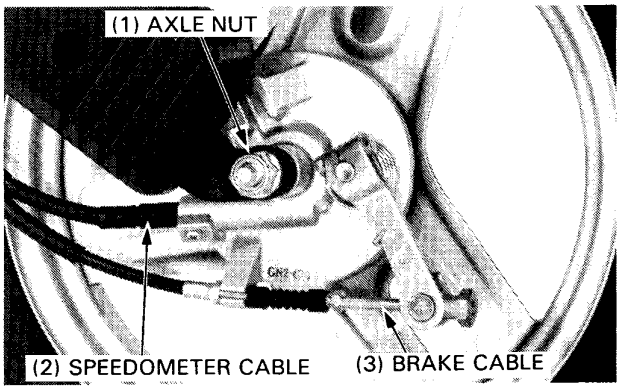

FRONT BRAKE

REMOVAL

Remove the front wheel (page 12-5).

Remove the brake panel from the wheel hub.

INSPECTION

BRAKE DRUM

Measure the brake drum I.D.

SERVICE LIMIT: 80.5 mm (3.17 in)

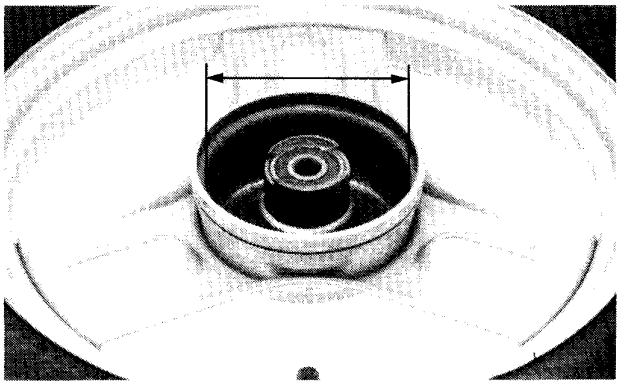

BRAKE LINING

Measure the brake lining thickness.

SERVICE LIMIT: 2.0 mm (0.08 in)

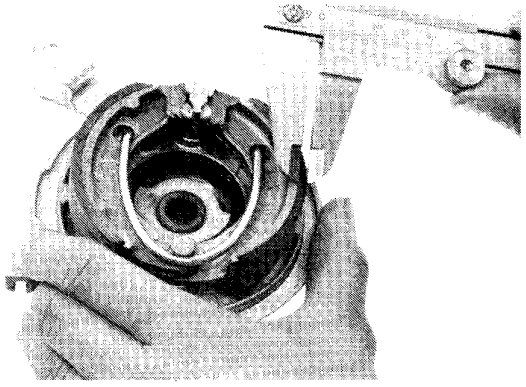

BRAKE PANEL DISASSEMBLY

Turn the brake arm and expand the brake shoes.
Pry the shoe spring off the anchor pin and remove the spring and brake shoes.
Remove the brake arm and cam.
Remove the dust seal and speedometer drive gear.

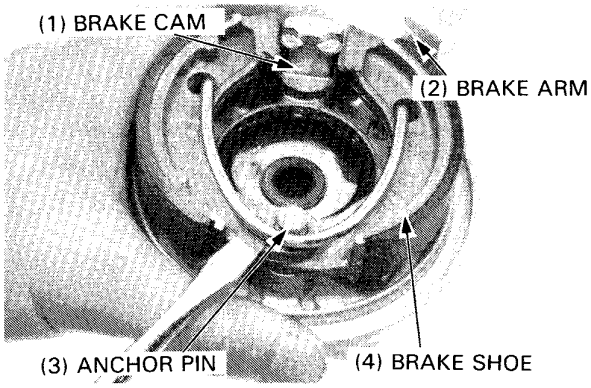

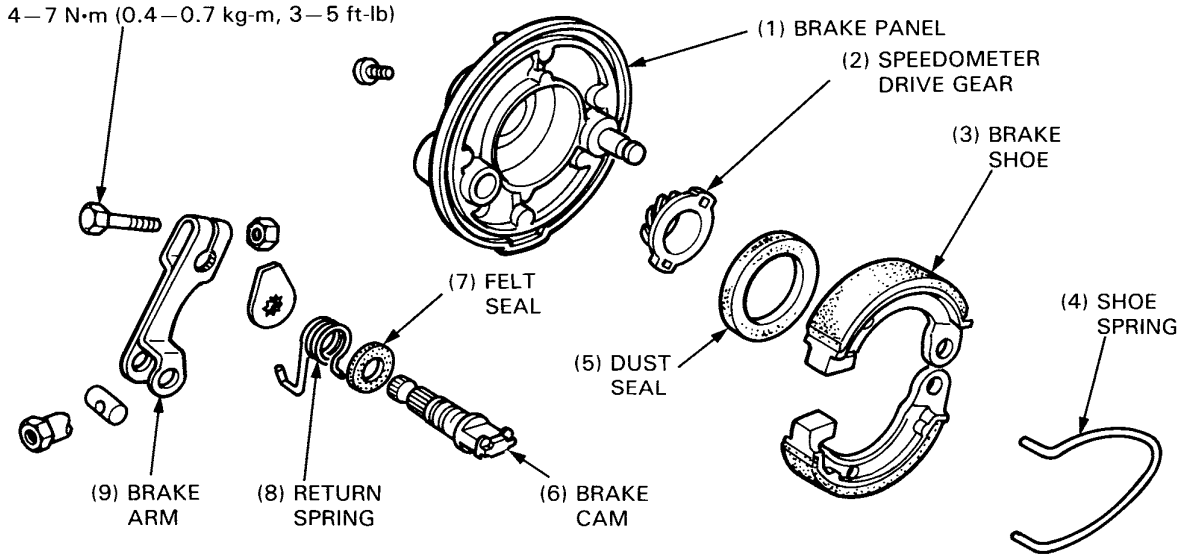

BRAKE PANEL ASSEMBLY

Apply grease to the speedometer drive gear and install the drive gear into the brake panel.
Install a new dust seal and apply grease to the seal lips.

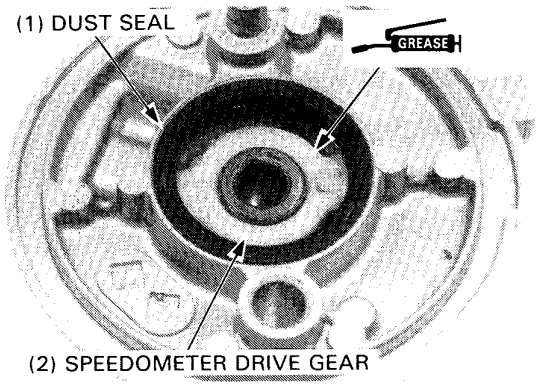

Apply grease to the anchor pin and brake cam and install the brake cam into the brake panel.

WARNING

- *Avoid getting grease on the inside of the brake drum or braking power will be reduced. Clean the inside of the brake panel thoroughly*

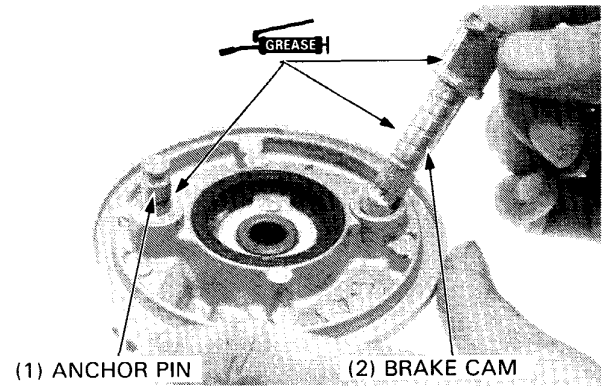

Install the brake arm return spring aligning its end with the hole in the brake panel.

Apply clean oil to the felt seal and install it into the brake panel. Install the wear indicator plate onto the brake cam aligning its wide tooth with the wide groove on the cam.

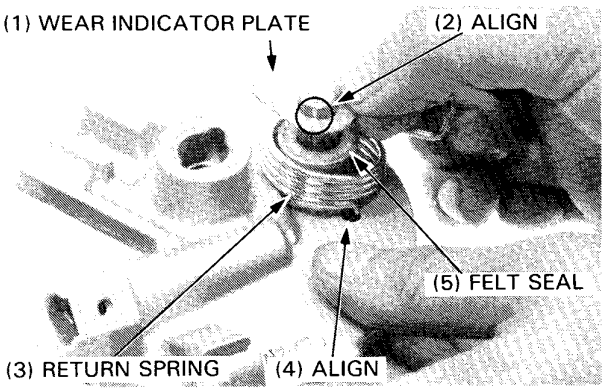

Install the brake arm onto the brake cam, aligning the punch mark on the arm with the index mark on the cam.

Install and tighten the brake arm bolt and nut.

TORQUE: 4—7 N·m (0.4—0.7 kg-m, 3—5 ft-lb)

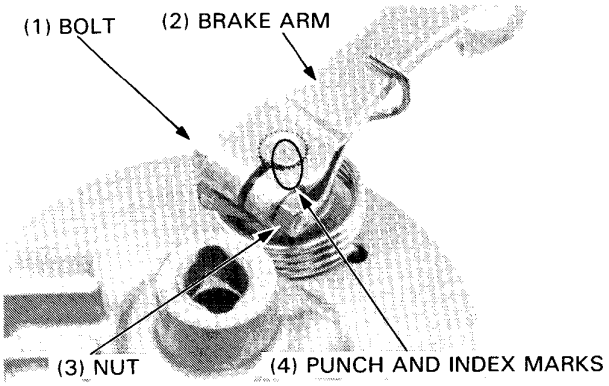

Install the brake shoes and shoe spring onto the brake panel. Turn the brake arm so that the brake shoes are expanded and press the spring over the anchor pin.

INSTALLATION

Install the brake panel into the wheel hub.
Install the front wheel (page 12-7).

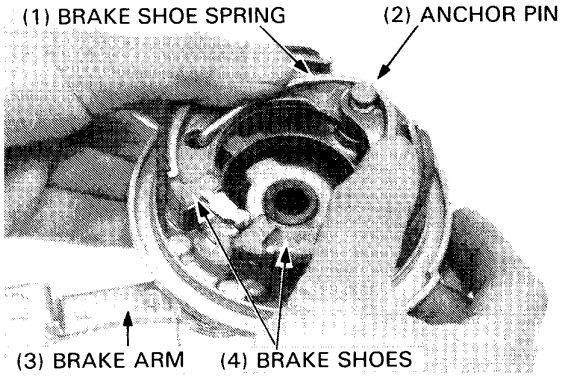

PIVOT ARMS

REMOVAL

Remove the front wheel (page 12-5).
Remove the pivot arm covers by removing the bolts.

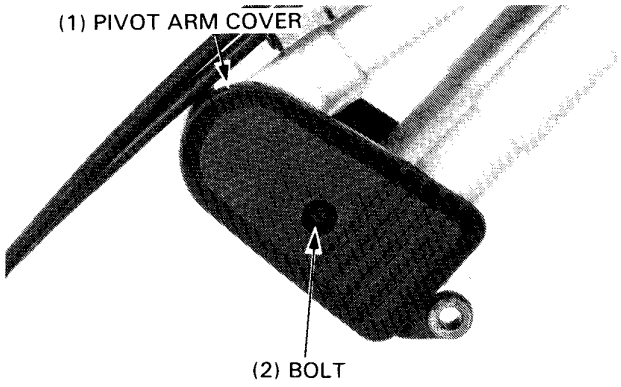

Remove the shock lower mount nuts and bolts.
Remove the pivot arms by removing the pivot arm bolts and nuts.

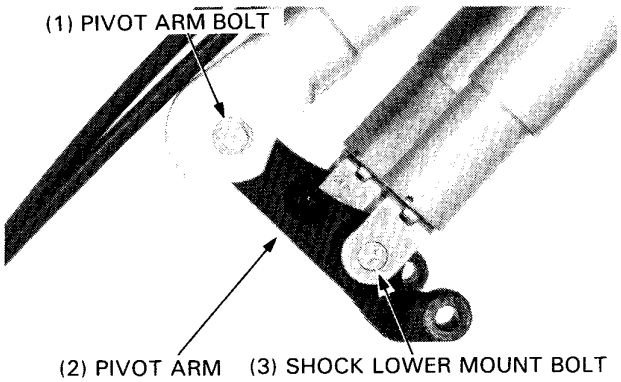

DISASSEMBLY

Remove the dust covers, felt seals and shock lower mount collar.
Remove the pivot collars and O-rings.

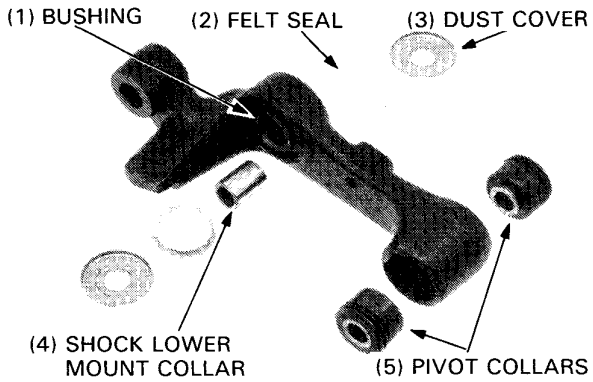

INSPECTION

Check the pivot and shock lower mount collars, the felt seals and the bushing for wear or damage.

ASSEMBLY

Install new O-rings onto the pivot collars, then grease the collars and install them in the pivot arm.
Grease and install the shock lower mount collar.
Install the felt seals and dust covers.

INSTALLATION

Install the pivot arms and tighten the pivot arm bolts and nuts.

TORQUE: 27—33 N·m (2.7—3.3 kg-m, 20—24 ft-lb)

Install and tighten the shock lower mount bolts.

TORQUE: 0.8—1.2 N·m (0.08—0.12 kg-m, 0.6—0.9 ft-lb)

Tighten the shock lower mount nuts.

TORQUE: 15—20 N·m (1.5—2.0 kg-m, 11—14 ft-lb)

Install the pivot arm covers.

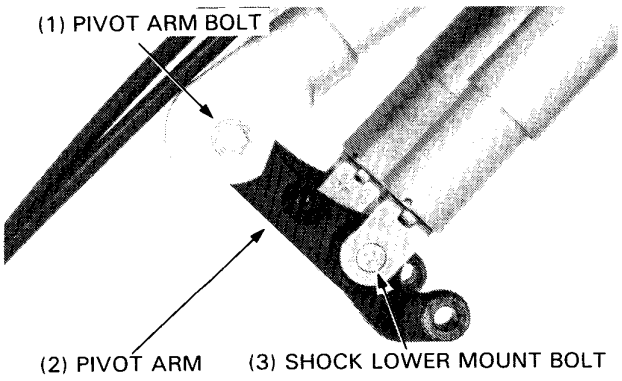

FRONT SHOCK ABSORBERS

REMOVAL

Remove the leg shield (page 11-3).
Remove the front fender attaching bolt.

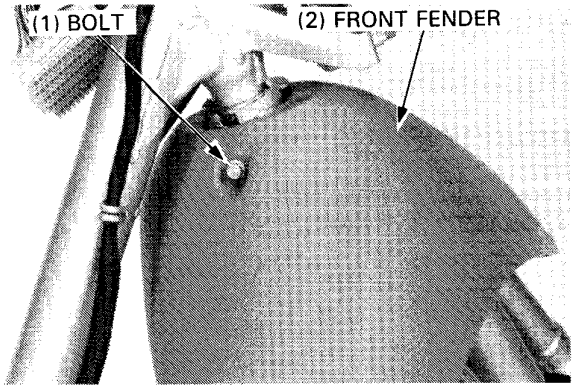

Raise the front wheel off the ground by placing a jack or block under the floor board.

Remove the shock absorbers by removing the upper mount bolts and lower mount nuts and bolts.

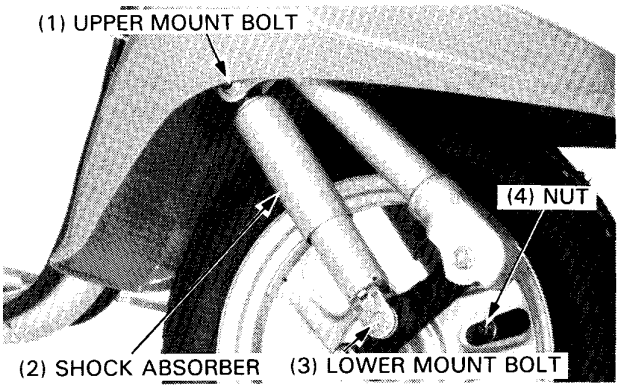

DISASSEMBLY

Compress the shock absorber, loosen the lock nut and remove the lower mount and lock nut.

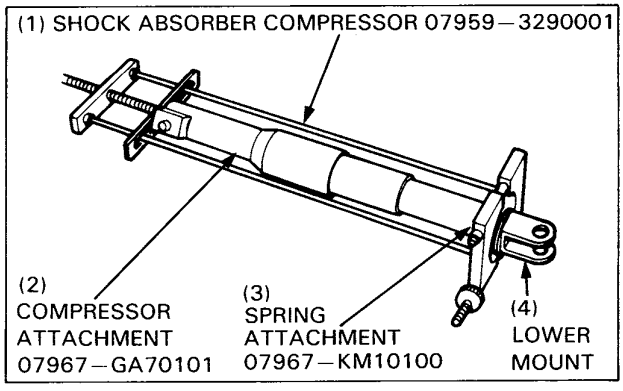

Remove the spring lower seat, spring, spring guide, spring upper seat and stop rubber from the damper unit.

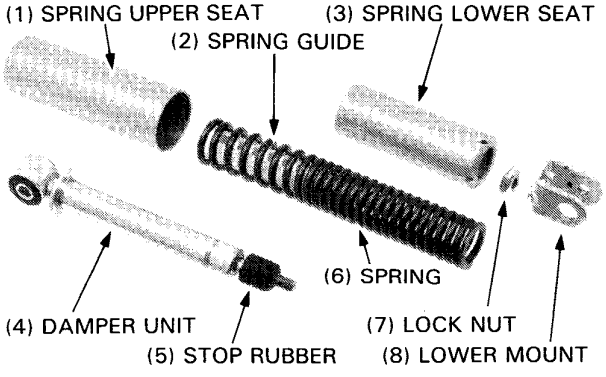

SPRING FREE LENGTH INSPECTION

Measure the shock absorber spring free length.

SERVICE LIMIT: 167.3 mm (6.59 in)

Place the upper spring seat, spring guide, spring and lower spring seat onto the damper unit.

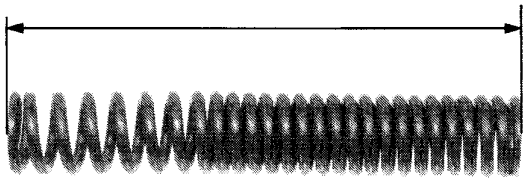

ASSEMBLY

Install the spring with the tightly wound coils facing down.
Apply a locking agent to the lock nut threads and install the nut.
Apply a locking agent to the damper rod threads and screw the lower mount on. Hold the lower mount in a vise and tighten the lock nut securely.

TORQUE: 15—25 N·m (1.5—2.5 kg-m, 11—18 ft-lb)

Check that the lock nut is seated against the rod's bottom thread.

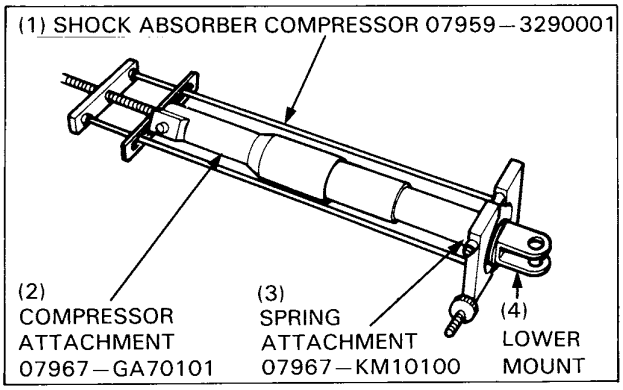

INSTALLATION

Install the shock absorbers and tighten the upper mount bolts.

TORQUE: 20—30 N·m (2.0—3.0 kg-m, 14—22 ft-lb)

Tighten the lower mount bolts and nuts.

TORQUE: Bolt 0.8—1.2 N·m
(0.08—0.12 kg-m, 0.6—0.9 ft-lb)
Nut 15—20 N·m
(1.5—2.0 kg-m, 11—14 ft-lb)

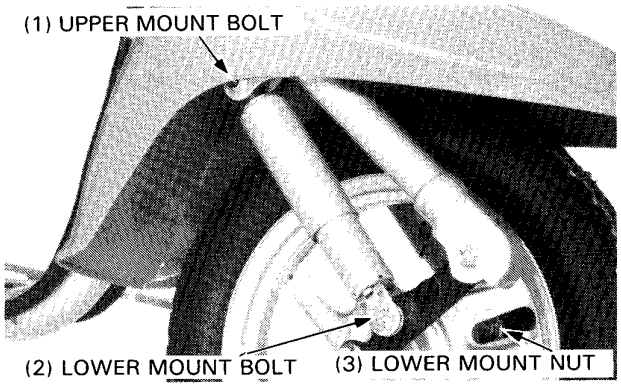

Tighten the front fender bolt, and install the leg shield (page 11-3).

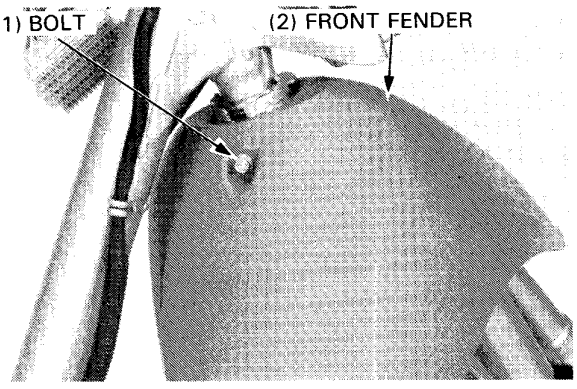

STEERING STEM

REMOVAL

Remove the following:
- leg shield (page 11-3).
- front wheel (page 12-5).
- handlebar (page 12-3).
- top cone race lock nut.

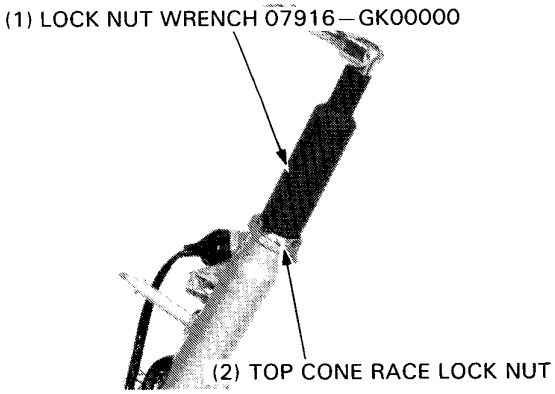

Remove the top cone race and steel balls.

NOTE

- Be careful not to let the steel ball fall out.

Pull the steering stem out of the steering head.

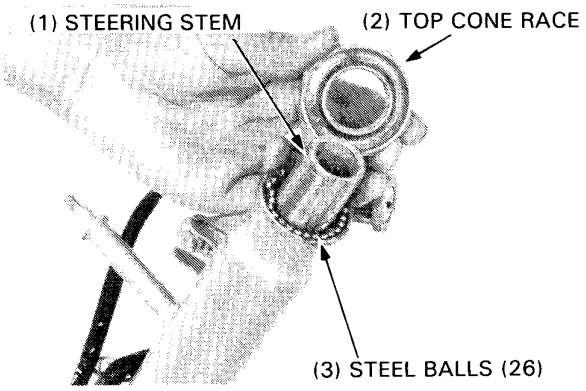

Remove the following:
- front fender bolt and fender.
- front shock absorbers (page 12-11).
- pivot arms (page 12-10).
- speedometer and front brake cables.

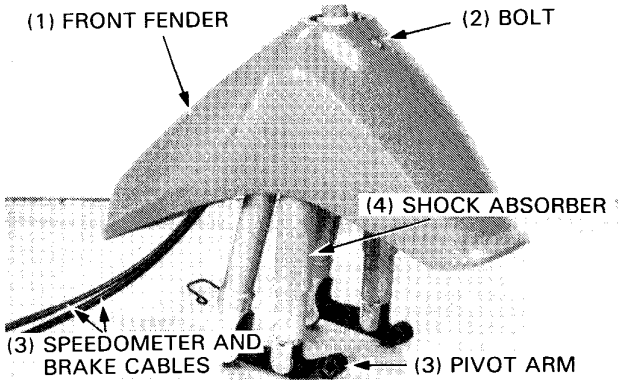

INSPECTION

Check the ball races and steel balls for wear or damage and replace them if necessary.

STERING HEAD/STEM RACE REPLACEMENT

Remove the top and bottom ball races from the steering head.

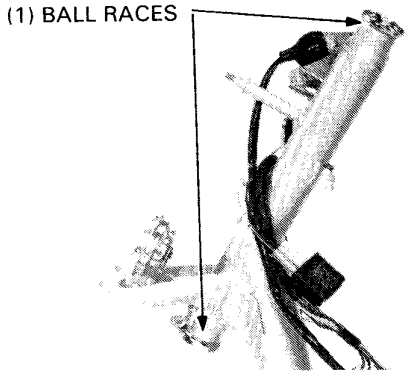

Drive in new top and bottom ball races.

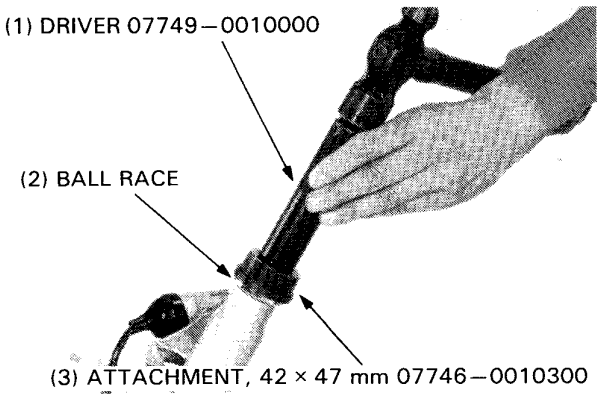

Remove the bottom cone race from the steering stem using a chisel.
Install a new bottom cone race.

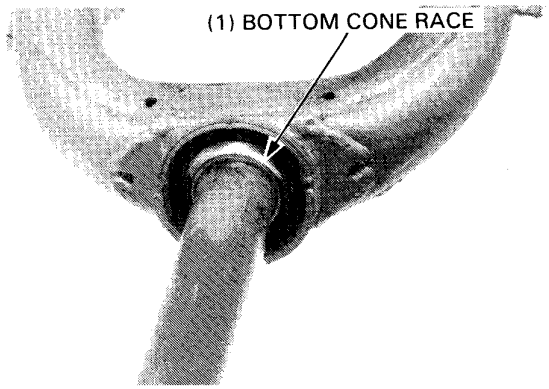

INSTALLATION

Install the following:
- pivot arms (page 12-10).
- shock absorbers (page 12-12).
- front fender.
- speedometer and brake cables into the steering head pipe.

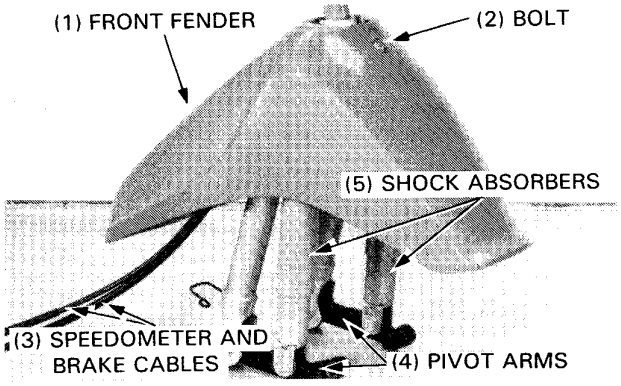

Grease the top and bottom ball races and install the 26 steel balls.
Insert the steering stem into the steering head and install the top cone race.
Tighten the top cone race lightly and back it out 1/8 turn.
Make sure that the steering stem rotates freely without vertical play.

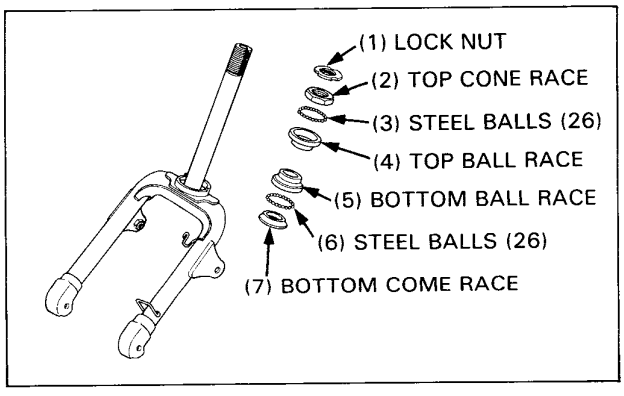

Hold the top cone race and tighten the lock nut.

TORQUE: 5—13 N·m (0.5—1.3 kg-m, 4—10 ft-lb)

Install the remaining removed parts in the reverse order of removal.

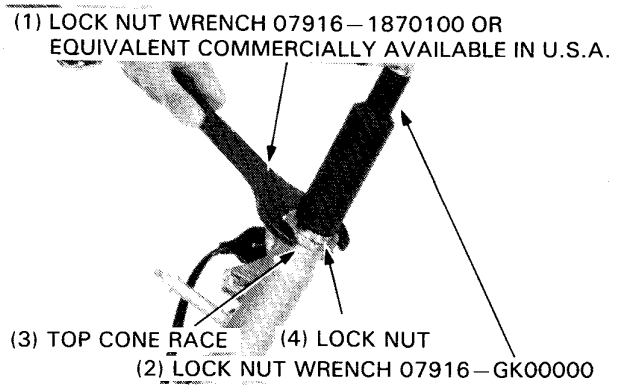

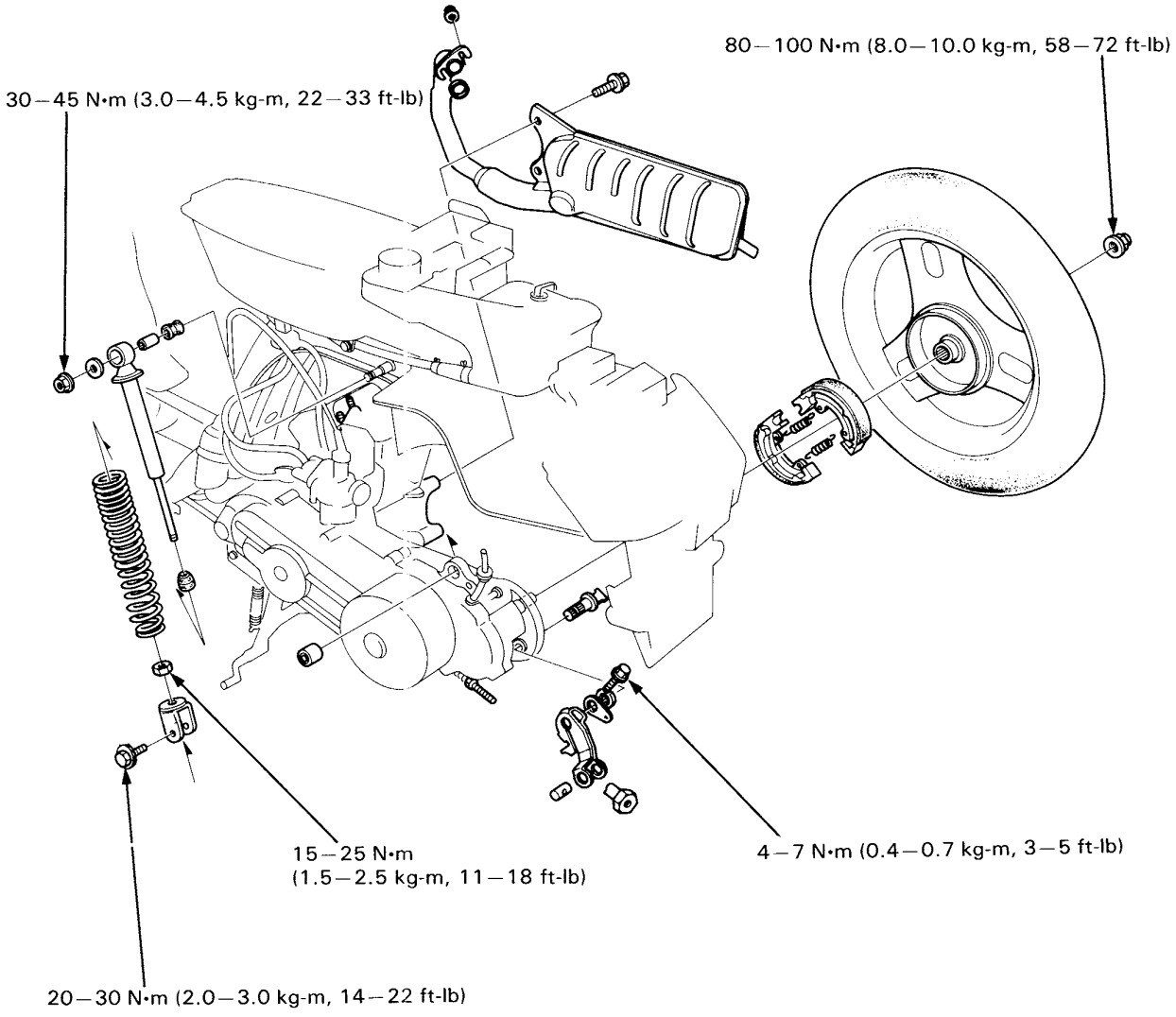
80—100 N•m (8.0—10.0 kg-m, 58—72 ft-lb)
30—45 N•m (3.0—4.5 kg-m, 22—33 ft-lb)
15—25 N•m
(1.5—2.5 kg-m, 11—18 ft-lb)
4—7 N•m (0.4—0.7 kg-m, 3—5 ft-lb)
20—30 N•m (2.0—3.0 kg-m, 14—22 ft-lb)

13. REAR WHEEL/BRAKE/SUSPENSION

SERVICE INFORMATION	13-1	REAR BRAKE	13-3
TROUBLESHOOTING	13-1	REAR SHOCK ABSORBER	13-5
REAR WHEEL	13-2		

SERVICE INFORMATION

GENERAL

- Brake dust contains asbestos which can be harmful to your health.
- Do not use compressed air to clean brake drums or brake panels. Use a vacuum with a sealed dust collector. Wear a protective face mask and thoroughly wash your hands when finished.

SPECIFICATIONS

ITEM	STANDARD mm (in)	SERVICE LIMIT mm (in)
Rear wheel rim runout	—	2.0 (0.08)
Rear brake drum I.D.	95.0 (3.74)	95.5 (3.76)
Rear brake lining thickness	5.0 (0.2)	2.0 (0.08)
Rear shock absorber spring free length	208 (8.19)	201.8 (7.95)

TORQUE VALUES

Rear axle nut	80—100 N·m (8—10 kg-m, 58—72 ft-lb)	
Rear shock absorber upper mount nut	30—45 N·m (3.0—4.5 kg-m, 22—33 ft-lb)	
Rear shock absorber lower mount bolt	20—30 N·m (2.0—3.0 kg-m, 14—22 ft-lb)	
Rear shock absorber damper rod lock nut	15—25 N·m (1.5—2.5 kg-m, 11—18 ft-lb)	Apply locking agent to the nut threads
Brake arm bolt	4—7 N·m (0.4—0.7 kg-m, 3—5 ft-lb)	

TOOLS

Special

Shock absorber compressor attachment	07967—GA70101
Spring attachment	07967—1180100

Common

Shock absorber compressor	07959—3290001

TROUBLESHOOTING

Rear wheel wobbling
- Bent rim
- Faulty tire
- Axle not tightened properly

Soft suspension
- Weak shock absorber spring

Suspension noise
- Shock spring binding
- Damaged stop rubber

Poor brake performance
- Brake not adjusted properly
- Contaminated brake shoes
- Worn brake shoes
- Worn brake shoes at cam contacting area
- Worn brake cam
- Worn brake drum
- Improper engagement between brake arm and camshaft serrations

Brake squeaks
- Worn brake shoes
- Foreign matter on lining
- Rough brake drum shoe contacting face
- Brake shoes glazed

REAR WHEEL

REMOVAL

Remove both frame rear covers (page 11-2).
Remove the exhaust muffler by removing the mounting bolts and loosening the joint nuts.

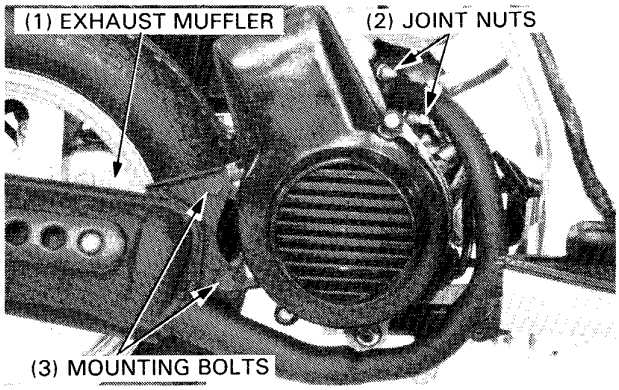

Remove the axle nut.
Remove the rear wheel.

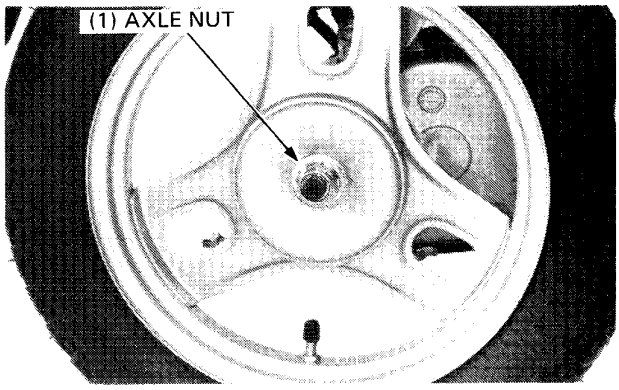

INSPECTION

WHEEL RIM RUNOUT

Check the wheel rim for runout using a dial gauge as shown.

SERVICE LIMITS:
Radial: 2.0 mm (0.08 in)
Axial: 2.0 mm (0.08 in)

Replace the wheel if runout is beyond the service limit.

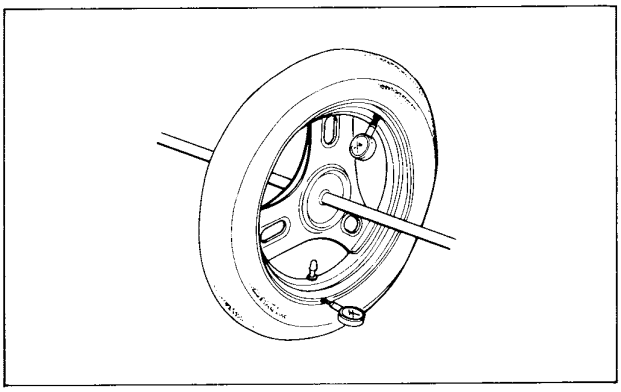

INSTALLATION

Install the rear wheel and tighten the axle nut.

TORQUE: 80—100 N·m (8.0—10.0 kg-m, 58—72 ft-lb)

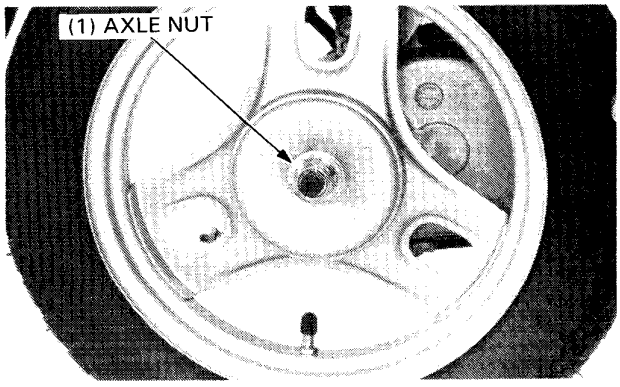

Install the muffler and tighten the mounting bolts and joint nuts.
Install both frame rear covers (page 11-2).

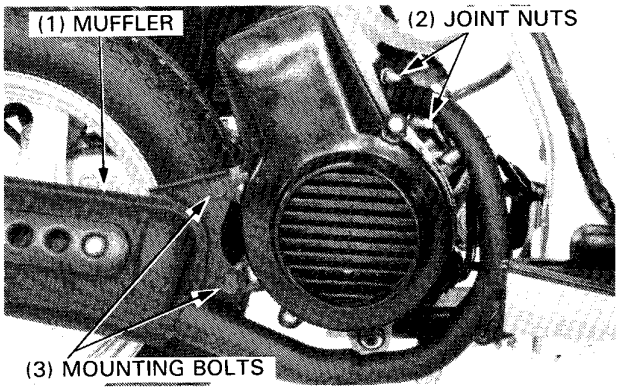

REAR BRAKE

INSPECTION

BRAKE DRUM

Remove the rear wheel (page 13-2).
Measure the rear brake drum I.D.

SERVICE LIMIT: 95.5 mm (3.76 in)

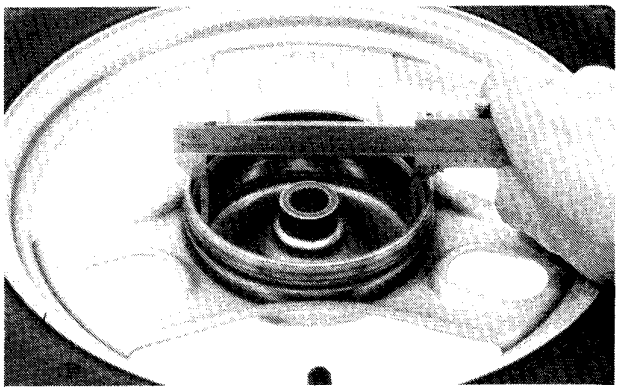

LINING THICKNESS

Measure the brake lining thickness.

SERVICE LIMIT: 2.0 mm (0.08 in)

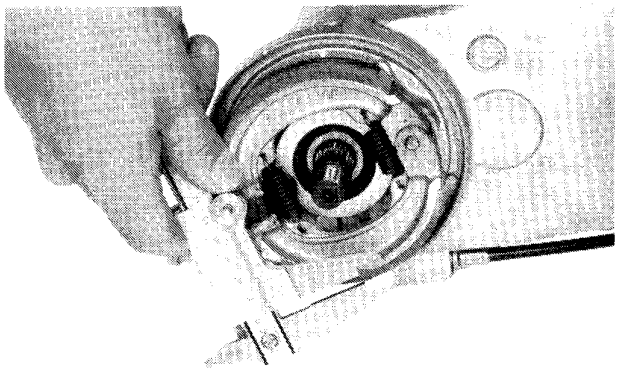

DISASSEMBLY

Remove the brake shoes, shoe springs and stop rubbers.
Remove the brake adjusting nut and disconnect the brake cable from the brake arm.
Remove the brake arm by removing the arm bolt.
Remove the wear indicator plate and felt seal.
Remove the brake cam.

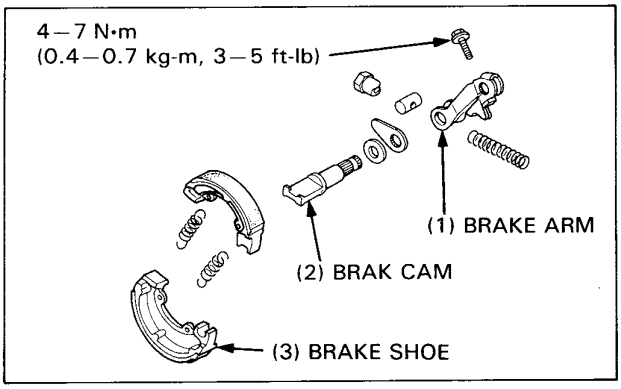

ASSEMBLY

Apply grease to the anchor pin and brake cam and install the cam.
Install the two brake shoe spring stop rubbers.

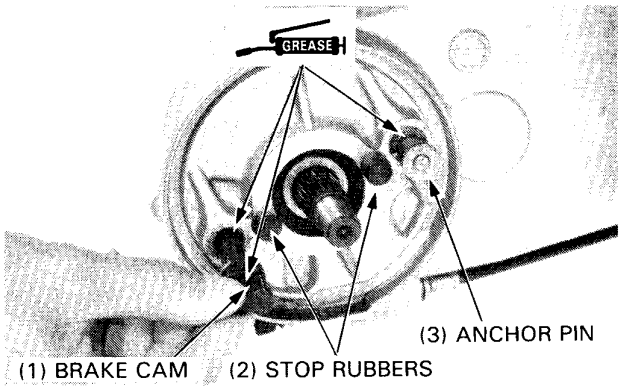

Install the felt seal onto the brake cam.
Install the wear indicator plate on the cam aligning its wide tooth with the cams wide groove.

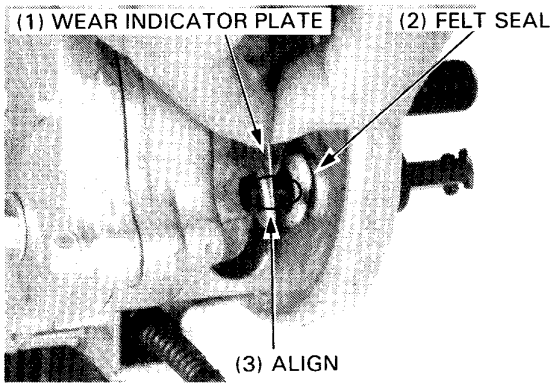

Align the index mark on the brake arm with the wide groove in the brake cam and install the arm.

Tighten the brake arm bolt.

TORQUE: 4—7 N·m (0.4—0.7 kg-m, 3—5 ft-lb)

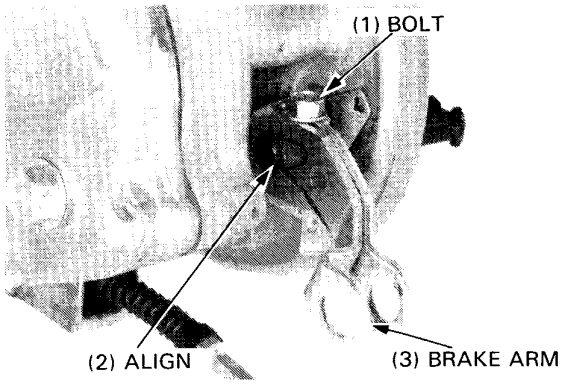

Install the brake arm return spring.

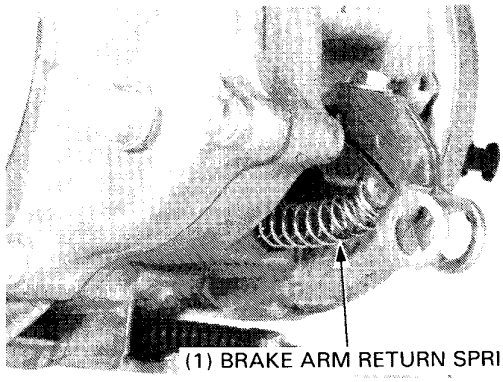

Install the brake shoes and shoe springs.

WARNING

- ***Keep grease off the brake linings. Wipe off excess grease.***

Connect the brake cable to the brake arm and install the adjusting nut.
Install the wheel and adjust the rear brake (page 3-5).

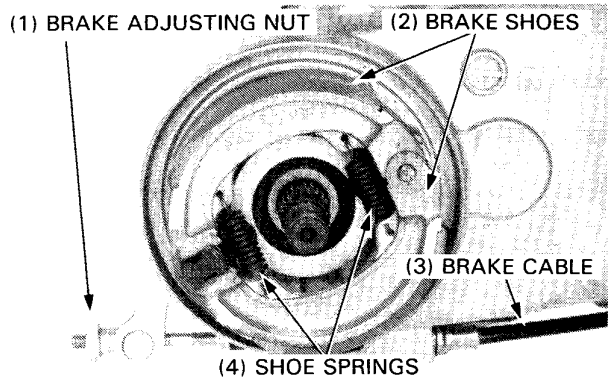

REAR SHOCK ABSORBER

REMOVAL

Remove both frame rear covers (page 11-2).
Remove the air cleaner case (page 4-13).
Remove the shock absorber upper mount nut and lower mount bolt and the shock absorber.

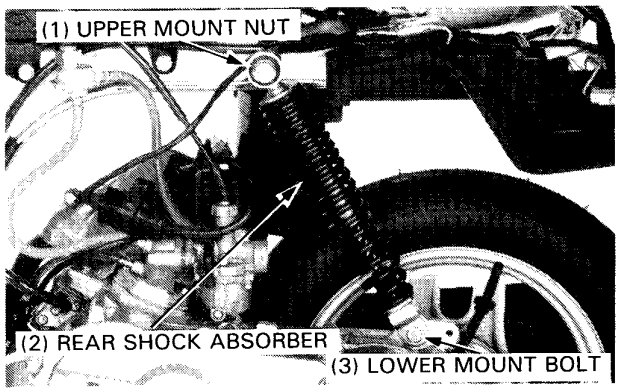

DISASSEMBLY

Compress the shock absorber spring, loosen the lock nut and remove the lower mount.
Remove the shock absorber spring.

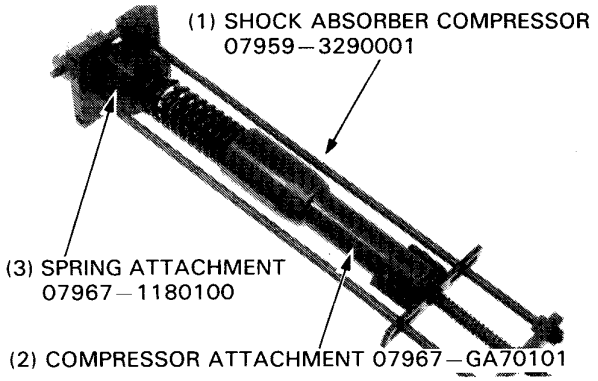

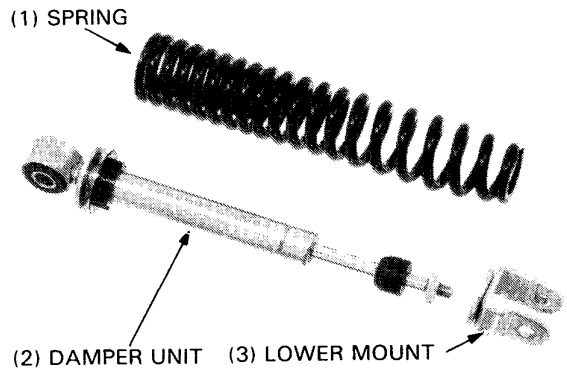

SPRING FREE LENGTH INSPECTION

Measure the spring free length.

SERVICE LIMIT: 201.8 mm (7.95 in)

Replace the spring if it is shorter than the service limit.

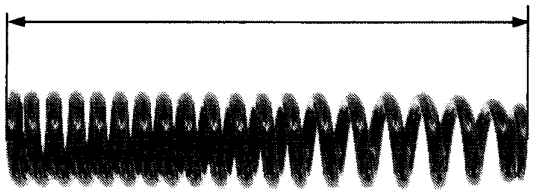

ASSEMBLY

Install the spring with the tightly wound coils facing up.

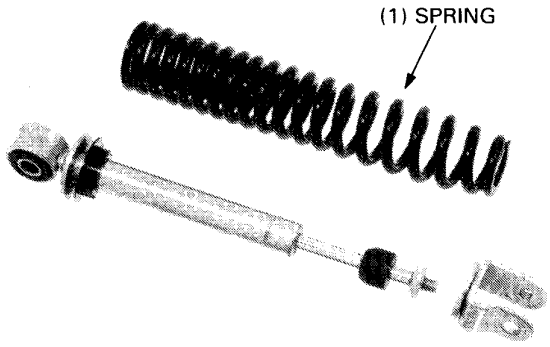

Compress the spring with the compressor and attachments.
Apply a locking agent to the lock nut threads and screw the lock nut all the way on the damper rod threads.
Apply a locking agent to the damper rod threads and install the lower mount.
Hold the lower mount and tighten the lock nut.

TORQUE: 15–25 N·m (1.5–2.5 kg-m, 11–18 ft-lb)

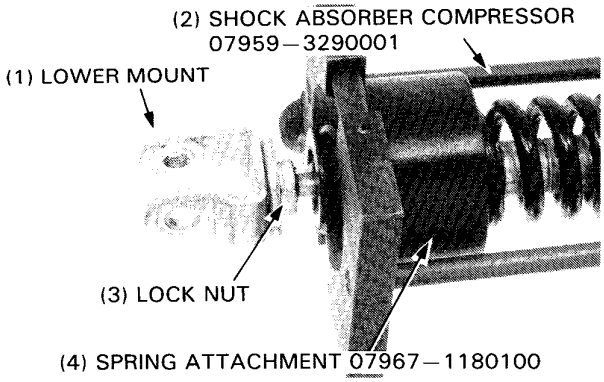

INSTALLATION

Install the rear shock absorber and tighten the upper mount nut and lower mount bolt.

TORQUE:
Upper mount nut: 30–45 N·m (3.0–4.5 kg-m, 22–33 ft-lb)
Lower mount bolt: 20–30 N·m (2.0–3.0 kg-m, 14–22 ft-lb)

Install the air cleaner case (page 4-13).
Install the frame rear covers (page 11-2).

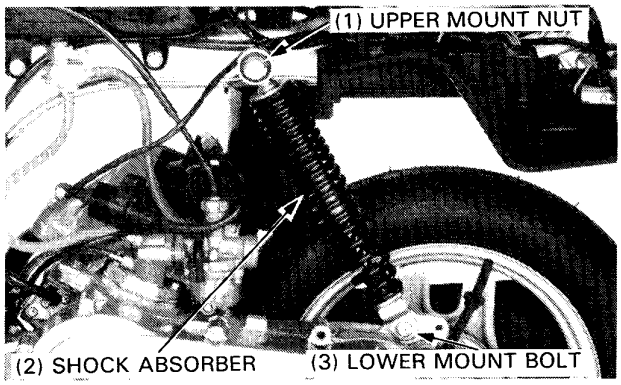

14. ELECTRICAL EQUIPMENT

SERVICE INFORMATION	14-1	SWITCHES/HORN	14-11
TROUBLESHOOTING	14-2	OIL LEVEL SENSOR	14-13
BATTERY	14-3	FUEL LEVEL SENSOR	14-14
CHARGING SYSTEM	14-4	INSTRUMENTS	14-15
IGNITION SYSTEM	14-6	LIGHTS	14-18
STARTING SYSTEM	14-9		

SERVICE INFORMATION

GENERAL

- Quick charge a battery only in an emergency. Slow-charging is preferred.
- Remove the battery from the scooter for charging. If the battery must be charged on the scooter, disconnect the battery cables.
- The battery on this scooter is a sealed type. Never remove the filling hole caps even when the battery is being charged. Use only a sealed type battery on this vehicle.
- Be sure to charge the battery with the amount of current and for the time indicated on the battery label and on page 14-3. Charging with excessive current and/or too fast may cause the battery failure.
- For alternatar removal, see section 7.
- Ignition timing cannot be adjusted. If the timing is incorrect, inspect the CDI unit and alternator and replace any faulty parts.

WARNING

- ***Do not smoke around a charging battery, and keep sparks away from it. The gas produced by a battery will explode if a flame or spark is brought near.***

SPECIFICATIONS

14

ITEM			
Battery	Capacity Charging current Charging time	12 V 3 AH Standard: 0.3 A, Maximum: 3.0 A Standard: 5.0 hours, Maximum: 30 minutes	
Alternator	Charging min^{-1} (rpm) Capacity	2,500 min^{-1} (rpm) max. (14.2 V) 0.7 A min. (18.0 V)/4,000 min^{-1} (rpm) 1.0 A min. (18.2 V)/6,000 min^{-1} (rpm)	
Spark plug		NGK	ND
	Standard	BPR6HSA, BPR6HS	W20FPR-L, W20FPR
	For cold climate	BPR4HSA, BPR4HS	W14FPR-L
	For extended high speed riding	BPR8HSA, BPR8HS	W24FPR-L, W24FPR
Spark plug gap		0.6—0.7 mm (0.024—0.028 in)	
Ignition timing		13° BTDC/1,800 ± 100 min^{-1} (rpm)	

TOOLS

Sanwa electrical tester (SP-10D, 07308—0020000) or
Kowa electrical tester (TH-5H) or
Kowa digital multimeter (KS-AHM-32-003, U.S.A. only)

TROUBLESHOOTING

CHARGING SYSTEM

No power-key turned on
- Dead battery
- Disconnected battery cable
- Main fuse burned out
- Faulty ignition switch

Low power-key turned on
- Weak battery
- Loose battery connection

Low power-engine running
- Battery undercharged
- Charging system failure
- Loose connection or short circuit in lighting system

Intermittent power
- Loose battery connection
- Loose charging system connection
- Loose starting system connection

Charging system failure
- Loose, broken, or shorted wire or connection
- Faulty voltage regulator
- Faulty alternator

IGNITION SYSTEM

No spark at plug
- Faulty spark plug
- Poorly connected, broken or shorted wire
  - — Between alternator and CDI unit
  - — Between CDI unit and ignition coil
  - — Between CDI unit and ignition switch
  - — Between ignition coil and spark plug
- Faulty ignition switch
- Faulty ignition coil
- Faulty CDI unit
- Faulty alternator

Engine starts but runs poorly
- Ignition primary circuit
  - — Faulty ignition coil
  - — Loose or bare wire or connector
  - — Poorly connected ignition switch
- Ignition secondary circuit
  - — Faulty ignition coil
  - — Faulty spark plug
  - — Faulty spark plug wire
  - — Poorly insulated plug cap
- Improper ignition timing
  - — Faulty alternator
  - — Stator not installed properly
  - — Faulty CDI unit

STARTING SYSTEM

Starter won't run
- Fuse burned out
- Weak battery
- Faulty ignition switch
- Faulty starter switch
- Faulty front or rear stop switch
- Faulty starter relay
- Poorly connected, broken or shorted wire
- Faulty starter motor

Lack of power
- Weak battery
- Loose or bare wire or connection
- Foreign matter stuck in starter or starter gear

Engine does not crank-starter rotates
- Faulty starter pinion
- Reverse rotation of starter
- Low battery

BATTERY

REMOVAL

Raise the seat and open the battery case cover.
Disconnect the negative cable from the battery first, then the positive cable.
Remove the battery.

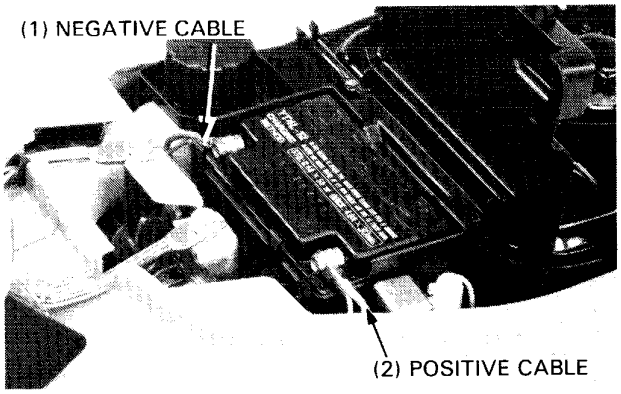

VOLTAGE INSPECTION

Measure the battery voltage using a digital voltmeter (07411—0020000).

VOLTAGE:
Fully charged: 13.1V
Under charged: Below 12.8V

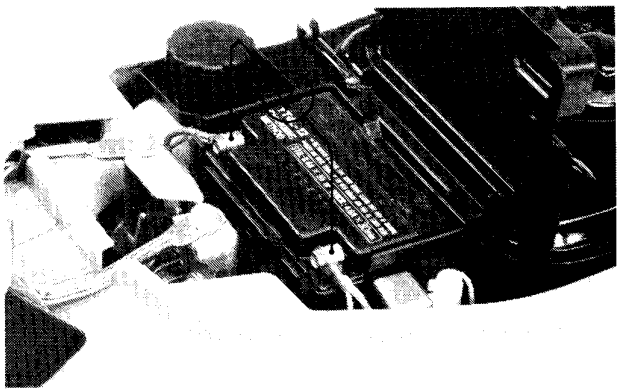

CHARGING

Connect the charger positive (+) cable to the battery positive (+) terminal.

Connect the charger negative (−) cable to the battery negative (−) terminal.

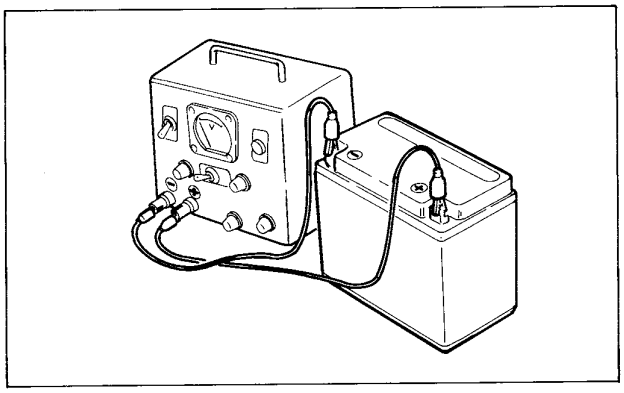

	Standard	Maximum
Charging current	0.3 A	3.0 A
Charging time	5 hours	30 minutes

WARNING

- ***Keep flames and sparks away from a charging battery.***
- ***Turn power ON/OFF at the charger, not at the battery terminals.***

CAUTION

- *Quick-charging should only be done in an emergency; slow-charging is preferred.*
- *Be sure to charge the battry with the correct current and for the time indicated above.*
- *Charging with excessive current and or too fast may cause battery failure.*

After installing the battery, coat the terminals with clean grease.

CHARGING SYSTEM

CHARGING CIRCUIT

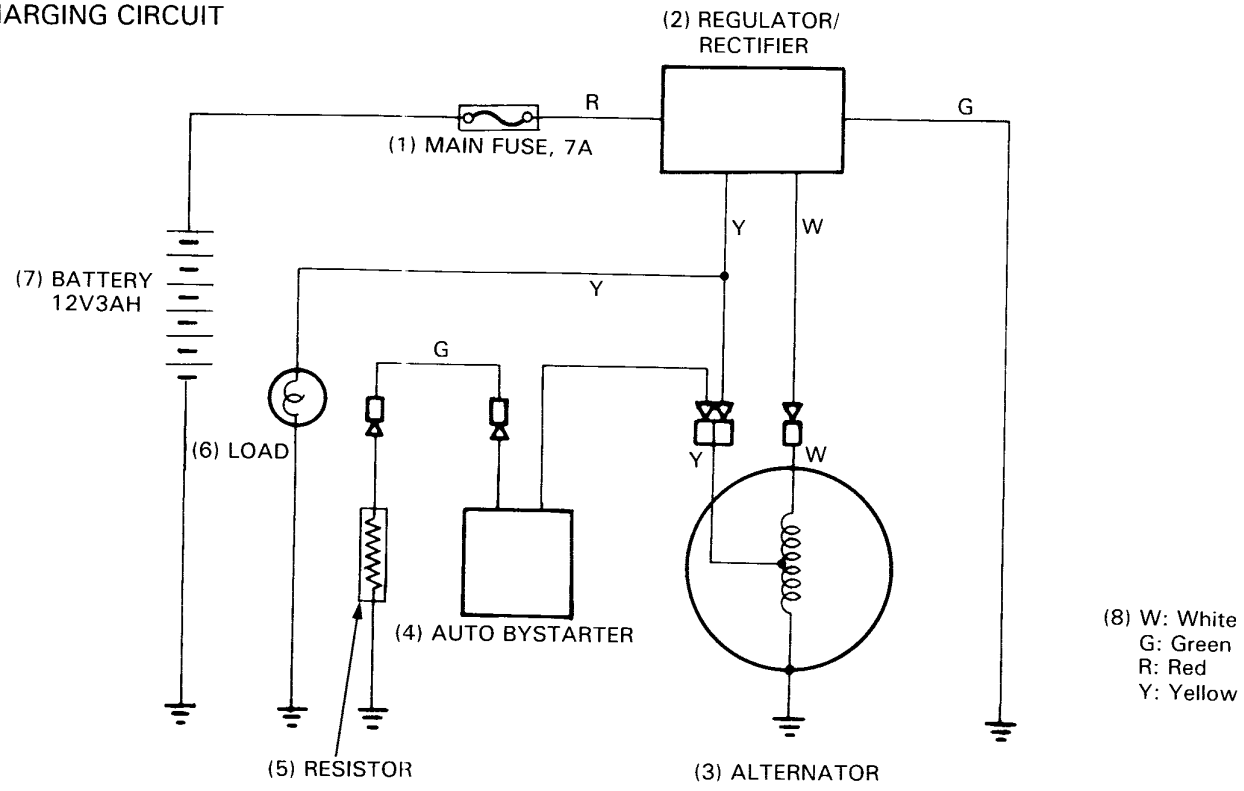

CURRENT TEST

NOTE

- Be sure the battery is in good condition before performing this test.

Warm up the engine.
Raise the seat and open the battery cover.
Open the fuse holder cover and disconnect the red wire lead from the fuse holder terminal.
Connect an ammeter between the red wire lead and fuse holder terminal as shown.
Connect the voltmeter across the battery terminals.
Start the engine, gradually increase engine speed and read the ammeter and voltmeter. The ampere and voltage should be 0A and 14—15V.
If the readings do not meet the specifications, check the wires for a loose connection and repair if necessary. If the wires are in good condition, replace the regulator/rectifier with a new one and retest.
If the readings still do not meet the specifications, perform the alternator output test (see next page).

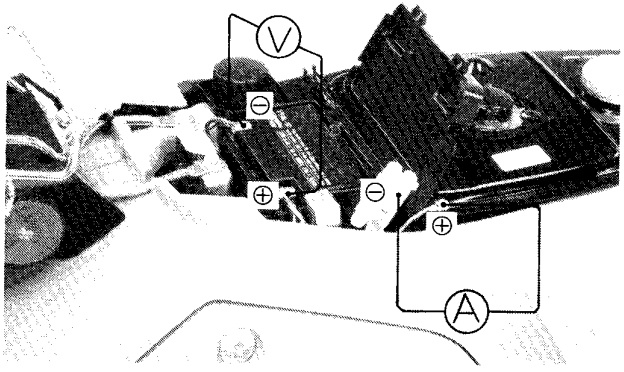

ALTERNATOR OUTPUT TEST

Disconnect the regulator/rectifier coupler.
Remove the yellow wire from the coupler and reconnect the coupler.
Connect the ammeter and voltmeter the same as for the current test (previous page).
Start the engine and gradually increase the engine speed.

Charging min^{-1} (rpm) (initial)	4,000 min^{-1} (rpm)	6,000 min^{-1} (rpm)
2,500 min^{-1} (rpm) max. (14.2 V)	0.7 A min. (18.0 V)	1.0 A min. (18.2 V)

Replace the alternator (See section 7) if the output is not within specifications.

ALTERNATOR STATOR COIL INSPECTION

NOTE

- This test can be made without removing the stator from the engine.

Disconnect the stator wire connectors.
Measure the resistances between the terminals as follows using the R x 1 scale:

White and engine ground	0.2—0.9 Ω
Yellow and engine ground	0.1—0.8 Ω

For alternator removal/installation, see pages 7-2 and 7-3.

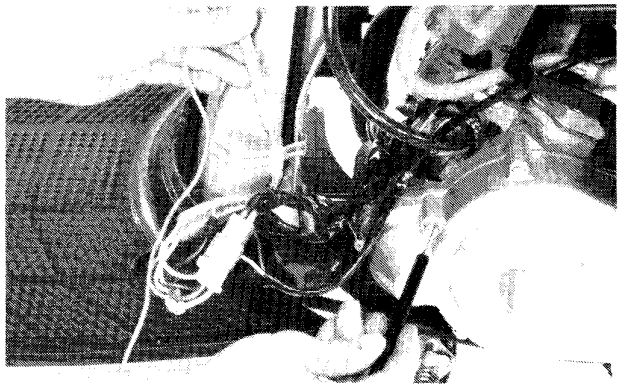

REGULATOR/RECTIFIER

Measure the resistances between the terminals. Replace the regulator/rectifier with a new one if the readings do not fall within the limits shown in the table.

NOTE

- For accurate testing, it is necessary to use a specified tester. Use of an improper tester or measurements in the improper range may give false reading.
- Use Sanwa Electrical Tester (SP-10D, 07308—0020000), Kowa Electrical Tester (TH-5H) or Kowa Digital Multimeter Tester (KS-AHM-32-003, U.S.A. only).

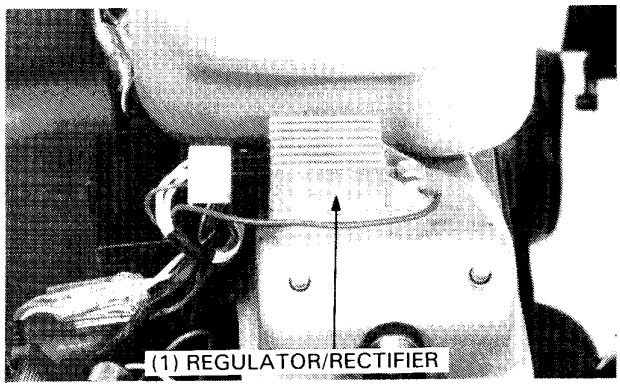

Measuring range:
SANWA ELECTRIC TESTER: x KΩ
KOWA ELECTRIC TESTER: x 100 Ω

− \ +	A	B	C	D
A		∞	0.5—10K	∞
B	∞		∞	5—100K
C	∞	∞		∞
D	∞	5—100K	∞	

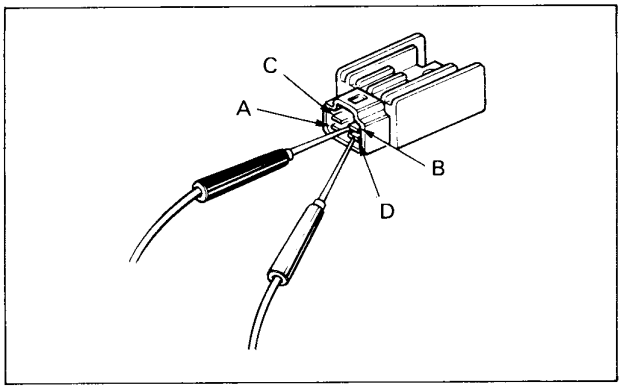

RESISTOR

Measure the resistance between the green wire lead and frame ground.

RESISTANCE: 5Ω

NOTE

- A faulty or poorly grounded resistor can be a cause of frequent instrument lamp failure.

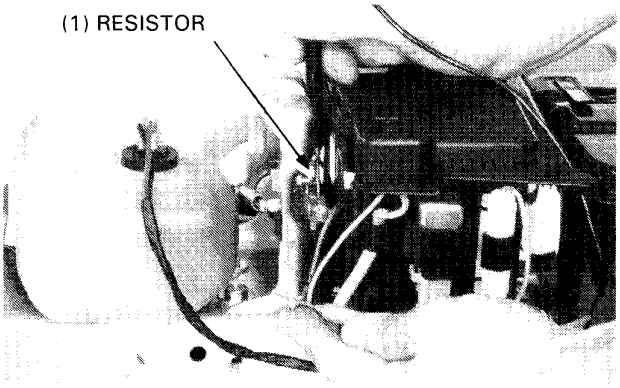

IGNITION SYSTEM

IGNITION CIRCUIT

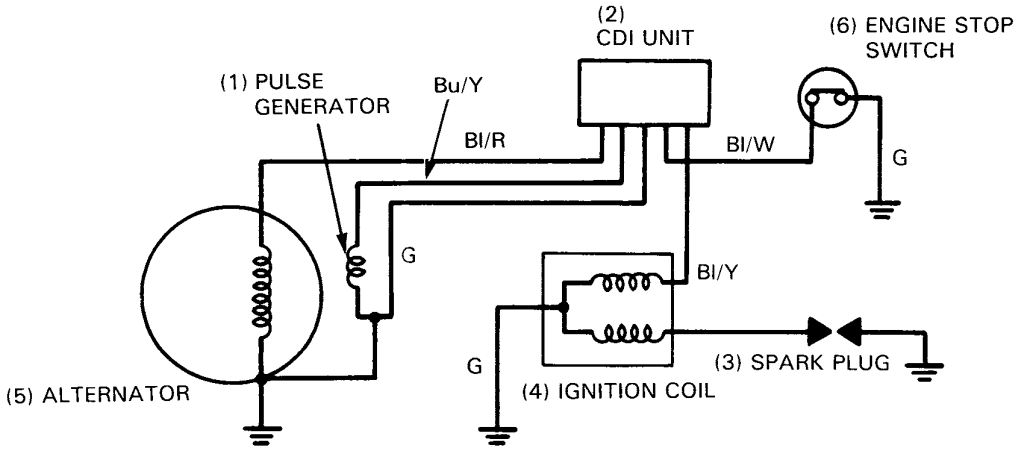

(6) W : White
G : Green
Bu : Blue
Bl : Black
Y : Yellow

IGNITION TIMING

NOTE

- The CDI ignition timing is not adjustable. If the ignition timing is not correct, check the CDI unit and alternator and replace any faulty parts.

Remove both frame rear covers (page 11-2).
Remove the fan cover (page 6-2).
Check the ignition timing with a timing light.
Timing is correct if the index mark aligns with the "F" mark at 1,800 min^{-1} (rpm).

IGNITION TIMING: 13° BTDC at 1,800 ± 100 min^{-1} (rpm)

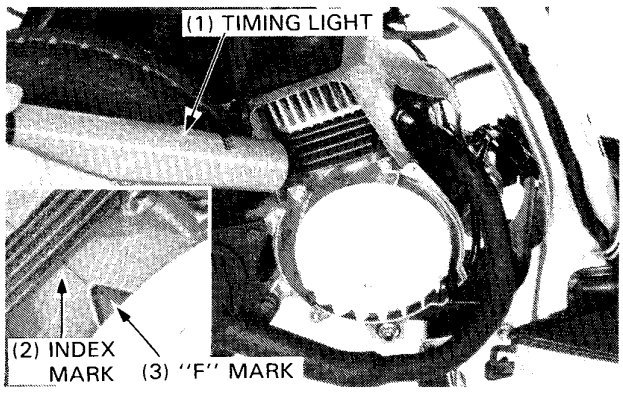

SPARK PLUG

For spark plug gap inspection and adjustment, refer to page 3-7.

IGNITION COIL

Remove the left frame rear cover (page 11-2).
Open the ignition coil box cover and disconnect the primary wires from the ignition oil.

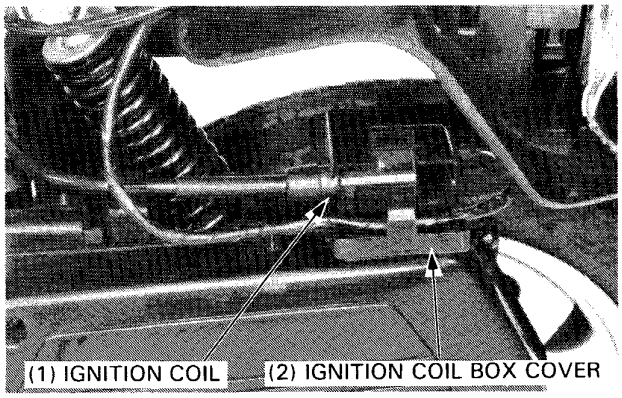

Measure the primary coil resistance.

RESISTANCE: 0.2—0.3 Ω

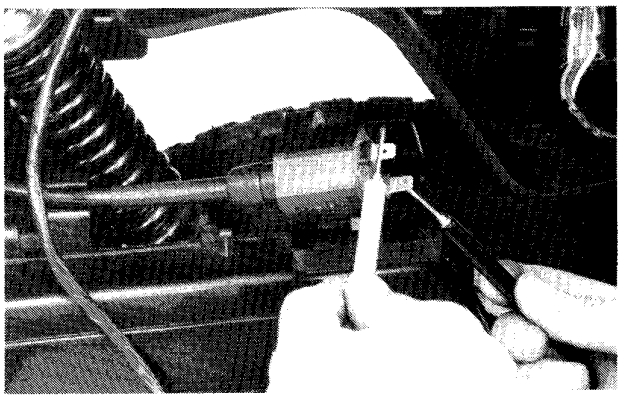

Disconnect the spark plug cap from the plug.
Measure the secondary coil resistance with the plug cap.

RESISTANCE WITH PLUG CAP: 8.0—8.5 kΩ

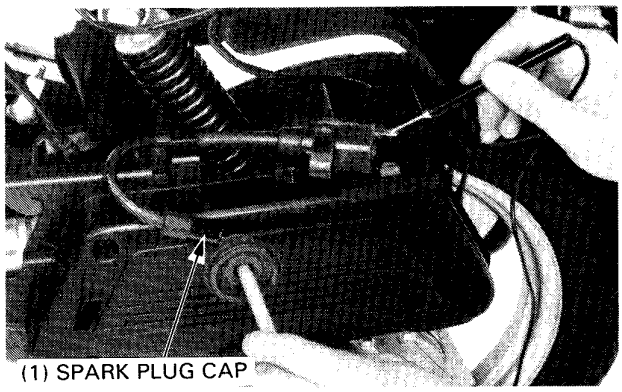

Unscrew the plug cap from the wire and measure the secondary coil resistance.

RESISTANCE WITHOUT PLUG CAP: 3.4—4.2 kΩ

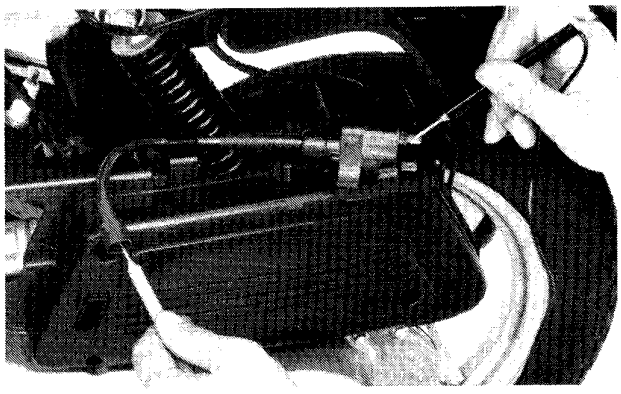

ALTERNATOR EXCITER COIL

Remove the left frame rear cover (page 11-2).
Disconnect the alternator black/red wire connector and measure the resistance between the wire and ground.

RESISTANCE: 600—1,000 Ω

For alternator removal/installation, see section 7.

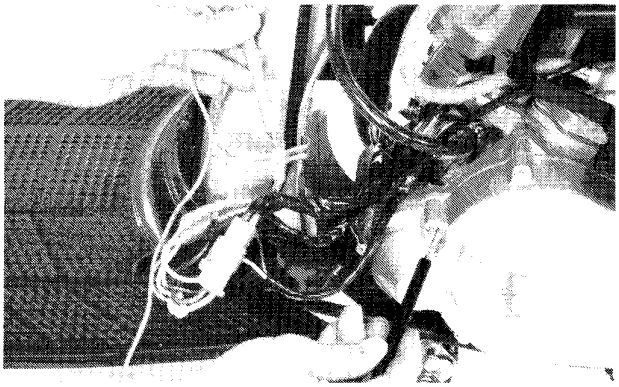

PULSE GENERATOR

Remove the left frame rear cover (page 11-2).
Disconnect the pulse generator blue/yellow wire connector.
Measure the resistance between the blue/yellow wire and ground.

RESISTANCE: 50—200 Ω

For pulse generator removal/installation, see section 7.

NOTE

- Replace the pulse generator and alternator stator as a set, if either one needs replacement.

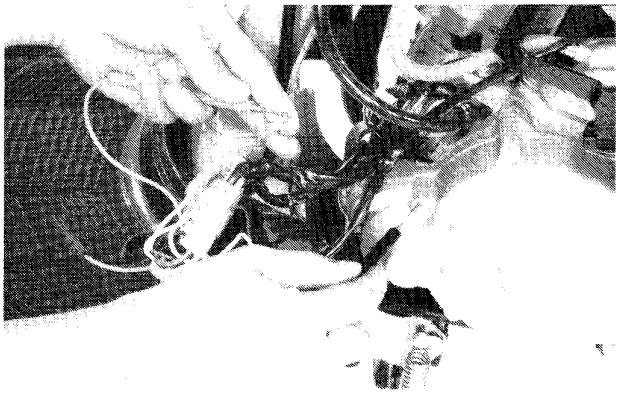

CDI UNIT

Remove both frame rear covers (page 11-2).
Disconnect the CDI coupler and remove the CDI unit.

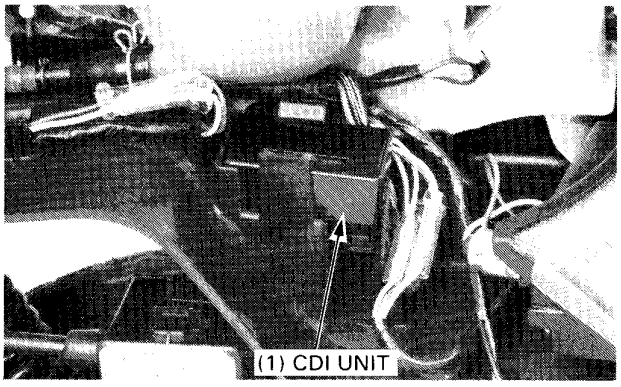

Measure the resistances between the terminals.
Replace the CDI unit with a new one if the readings do not fall within the limits shown in the table.

NOTE

- For accurate testing, it is necessary to use a specified tester. Use of an improper tester or measurements in an improper range may give inaccurate readings.
- Use Sanwa Electrical Tester (SP-10D, 07308—0020000), Kowa Electrical Tester (TH-5H) or Kowa Digital multimeter (KS-AHM-32-003, U.S.A. only).
- In the table, "Needle swings then returns" indicates that there is a charging current applied to a condenser. The needle will then remain at "∞" unless the condenser is discharged.

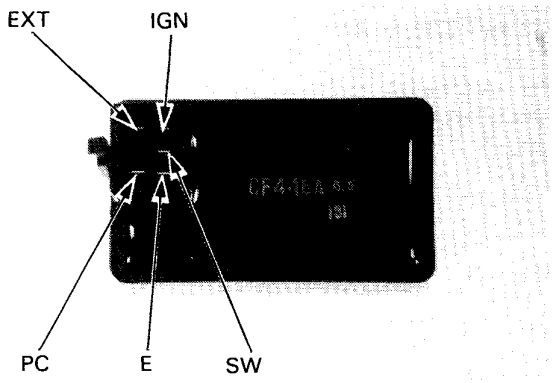

Range Sanwa: RX kΩ Kowa: RX 100Ω

(−)PROBE \ (+)PROBE	SW	EXT	PC	E	IGN
SW		∞	∞	∞	∞
EXT	0.1—10		∞	∞	Needle swings then returns" or ∞
PC	0.5—200	0.5—50		1—50	∞
E	0.2—30	0.1—10	∞		∞
IGN	∞	∞	∞	∞	

STARTING SYSTEM

STARTER CIRCUIT

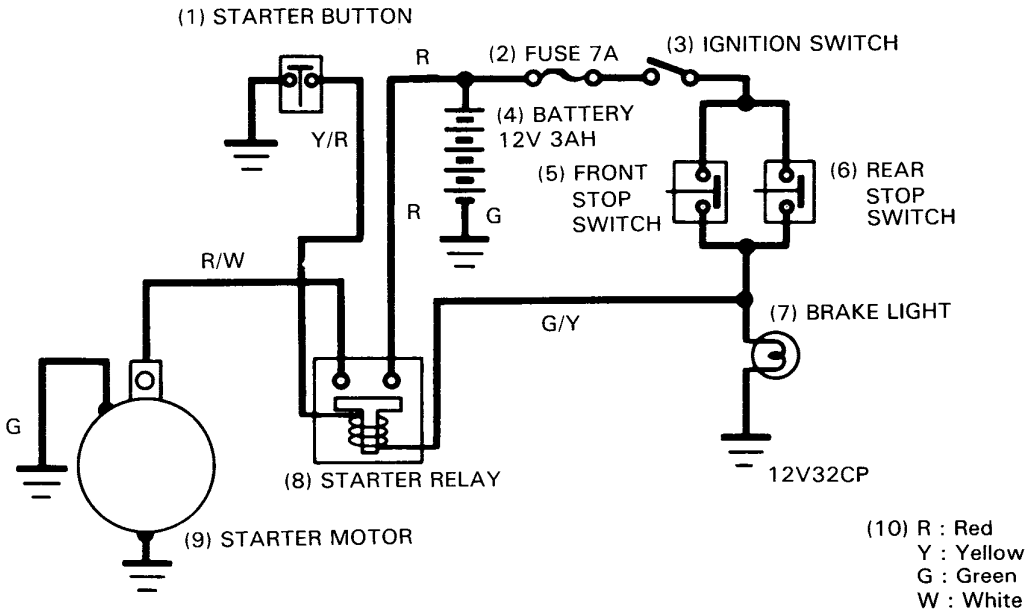

STARTER RELAY

Remove the left frame rear cover (page 11-2).
Disconnect the starter relay coupler and remove the relay.

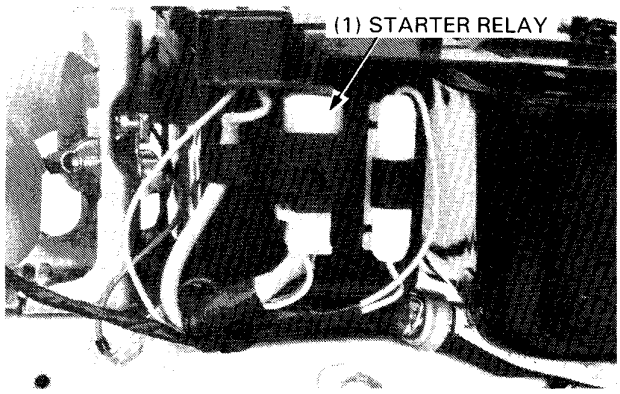

There should be continuity between the red and red/white terminals only when the positive probe of a 12V battery is attached to the green/yellow wire terminal and the negative probe is attached to the yellow/red wire terminal.

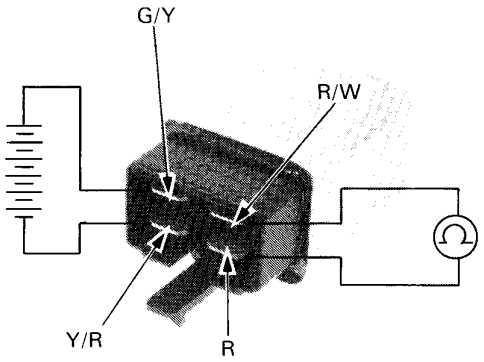

STARTER MOTOR

WARNING

- ***Perform this operation while the engine and exhaust muffler are COLD.***

Disconnect the negative wire from the battery.
Remove both frame rear covers (page 11-2).
Remove the two starter motor mounting bolts and the starter motor.

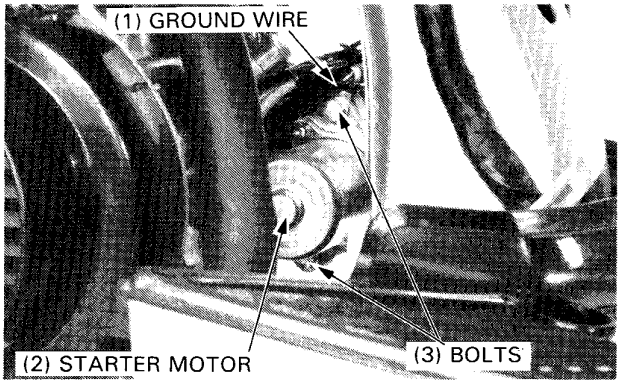

Disconnect the starter wire by removing the screw.
Remove the O-ring from the starter motor.

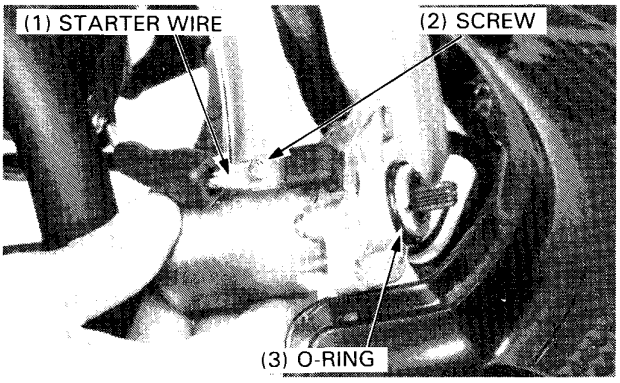

Connect the battery to the starter motor and check its operation. (Be careful to observe polarity.)
The motor should turn clockwise (viewed from the shaft side).

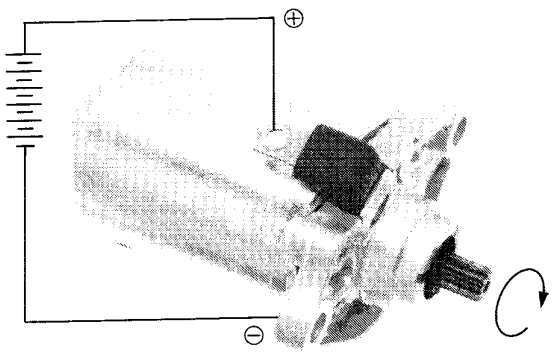

Install the O-ring onto the starter motor and apply grease to the O-ring.
Connect the starter wire to the motor terminal using the screw.

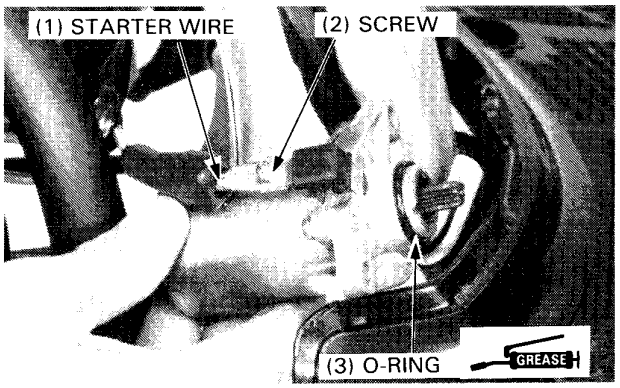

Install the starter motor and tighten the two mounting bolts.

NOTE

- Tighten the ground wire together with the upper mounting bolt.

Install both frame rear covers (page 11-2).

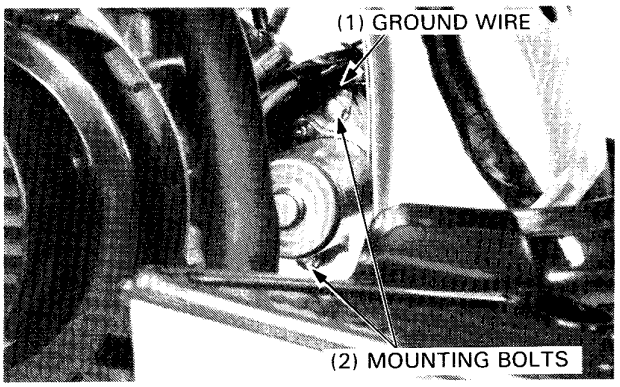

SWITCHES/HORN

Remove the front cover.
Check the continuity of each switch.
Continuity should exist between color coded wires indicated by interconnected circles on the following charts.

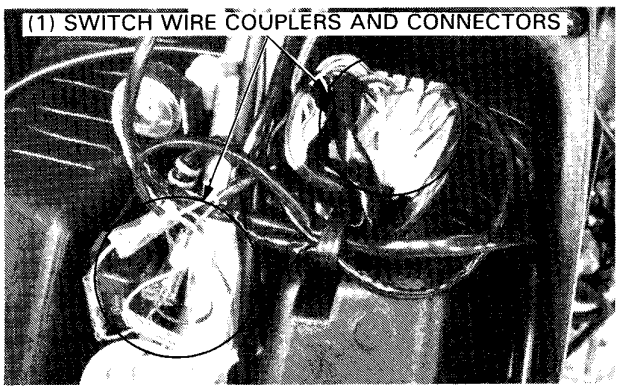

IGNITION SWITCH

COLOR	RED	BLACK	BLACK/ WHITE	GREEN
	BAT1	BAT2	IG	E
ON	○	○		
OFF			○	○

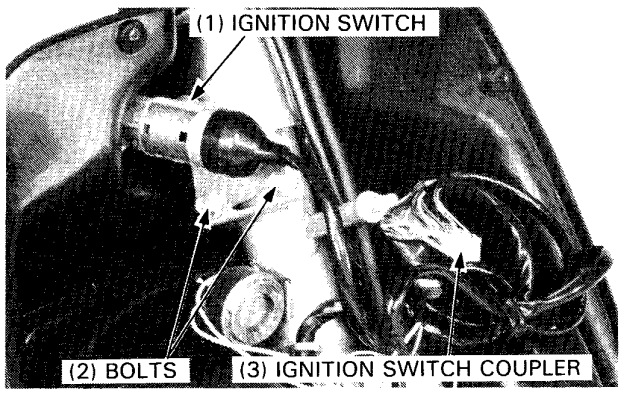

DIMMER SWITCH

COLOR	YELLOW	BLUE	WHITE
	HL	Hi	Lo
Lo	○		○
(N)	○	○	○
Hi	○	○	

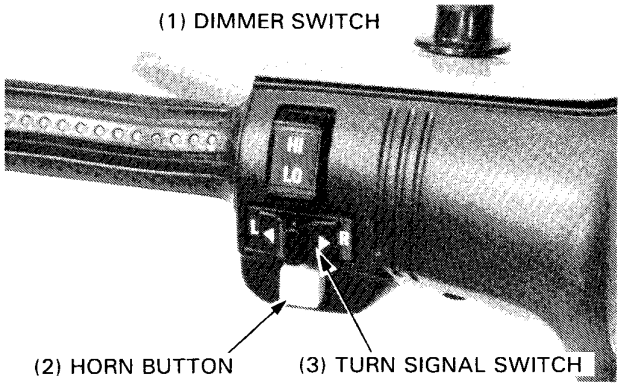

TURN SIGNAL SWITCH

COLOR	GREY	LIGHT BLUE	ORANGE
	W	R	L
R	○	○	
N			
L	○		○

HORN BUTTON

COLOR	LIGHT GREEN	BLACK
	Ho	BAT2
FREE		
PUSH	○	○

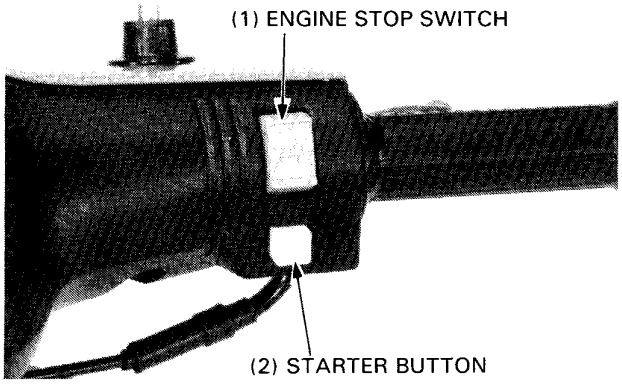

ENGINE STOP SWITCH

COLOR	BLACK/WHITE	GREEN
	IG	E
OFF	○	○
RUN		

STARTER BUTTON

COLOR	YELLOW/RED	GREEN
	ST	E
FREE		
PUSH	○	○

FRONT/REAR BRAKE LIGHT SWITCH

The switch is normal if there is continuity when the brake lever is applied.

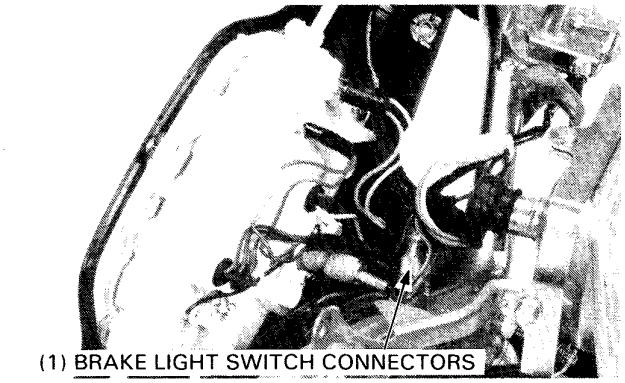

HORN

The horn is good if it sounds when 12V is applied across the terminals and replace if necessary.

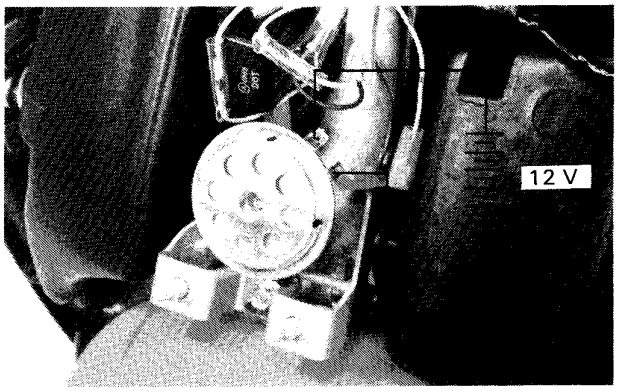

OIL LEVEL SENSOR

INSPECTION

Disconnect the wires and remove the sensor.

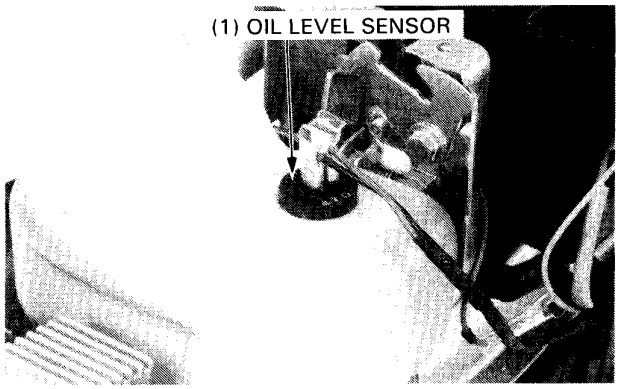

Check for continuity between the terminals with the upper and lower float positions.
There should continuity with the the float lower position and no continuity with the float raised.

Operate the turn signals to see that the battery circuit is normal, then perform the following inspection.

Connect the wires and turn the ignition switch ON.

Raise and lower the float to make sure that the oil level indicator blinks on and off.

NOTE

- Should the indicator fail to go on and go out as the float is moved up and down, check for a loose connection and repeat the above procedure.

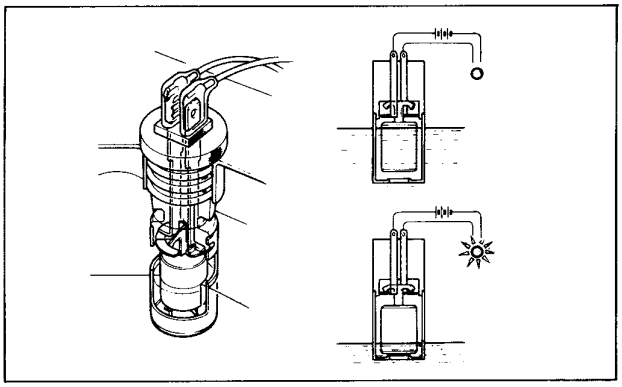

FUEL LEVEL SENSOR

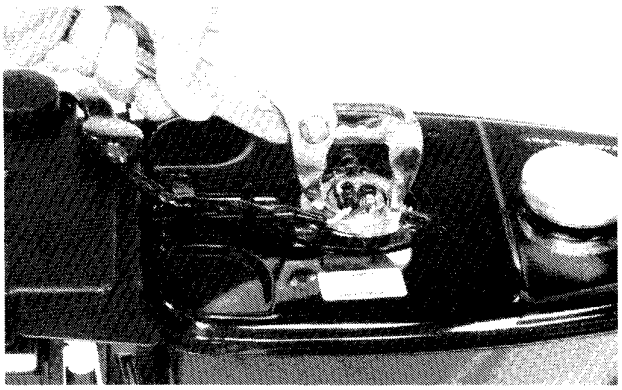

FUEL LEVEL SENSOR REMOVAL/ INSTALLATION

Disconnect the connectors and remove the unit from the fuel tank.

CAUTION

- *Do not bend the float arm.*

UNIT INSPECTION

Measure the resistances between the terminals with the float at the UPPER (FULL) and LOWER (EMPTY) positions.

FULL	9.4–10Ω
EMPTY	90–100Ω

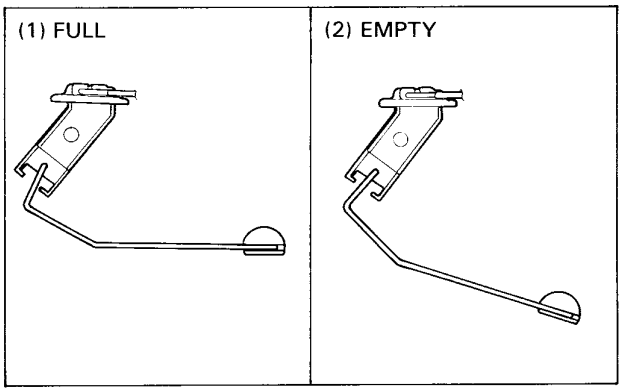

FUEL GAUGE INSPECTION

Connect the wire connectors and turn the ignition switch ON. Before performing the following test, operate the turn signals to determine that the battery circuit is normal.

Check the gauge needle for correct indication by moving the float up and down.

	Needle Position
FLOAT AT UPPER POSITION	"FULL"
FLOAT AT LOWER POSITION	"EMPTY"

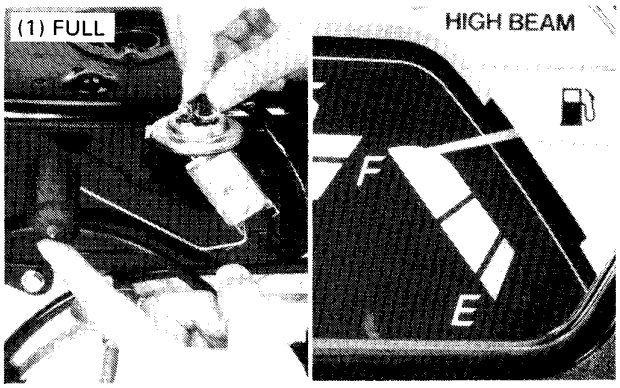

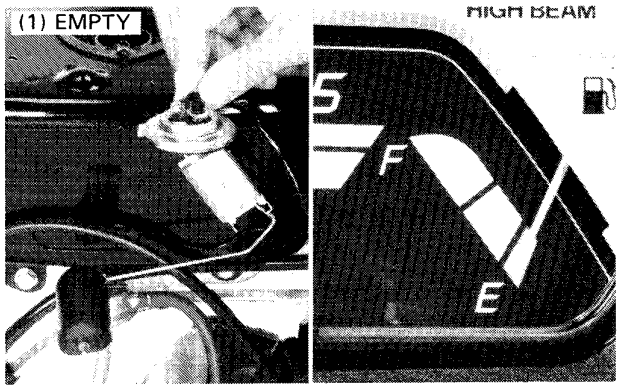

INSTRUMENTS

HANDLEBAR FRONT COVER REMOVAL/ INSTALLATION

Remove the rearview mirrors.

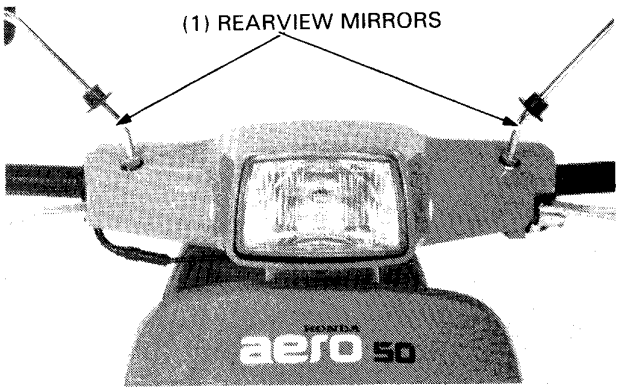

Remove the front screw.

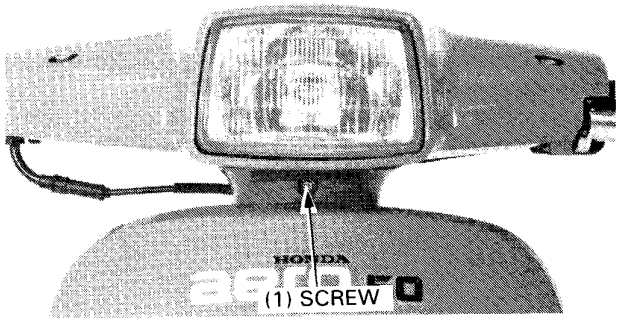

Remove the three rear cover screws.

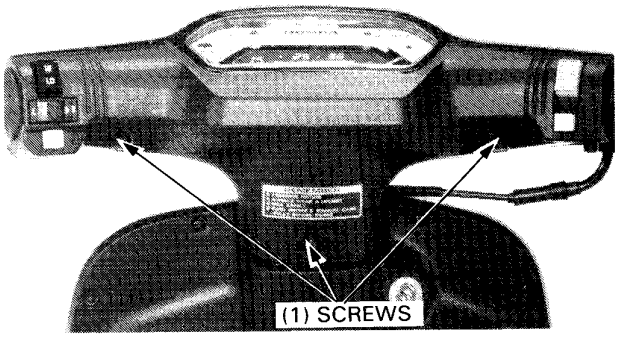

Remove the two handlebar front cover mounting screws and the front cover.

Install the handlebar front cover in the reverse order of removal.

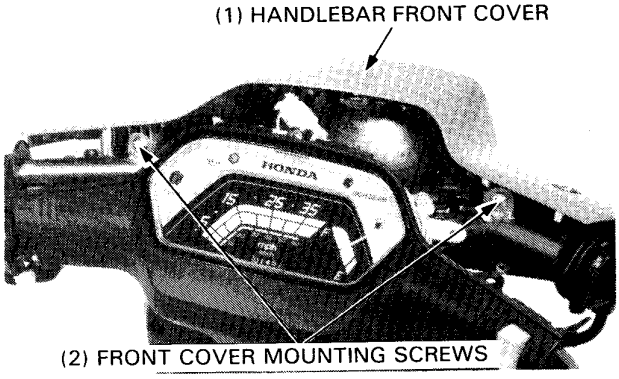

INSTRUMENT BULB REPLACEMENT

Pull out the bulb socket and replace the bulb with a new one.

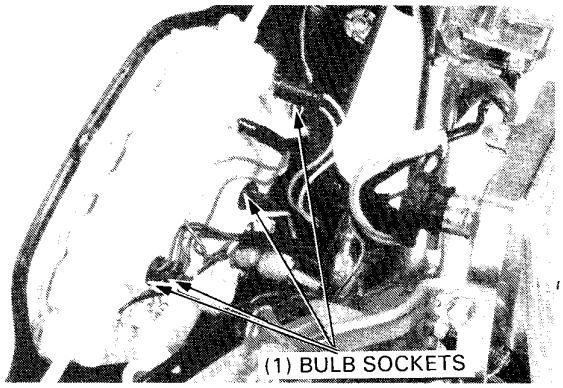

INSTRUMENTS/HANDLEBAR REAR COVER REMOVAL/ INSTALLATION

Remove the front cover (page 11-2).
Disconnect the headlight coupler, brake light switch case, wire connectors, case wire coupler and connectors.
Disconnect the speedometer cable from the instrument and remove the instruments with the handlebar rear cover.

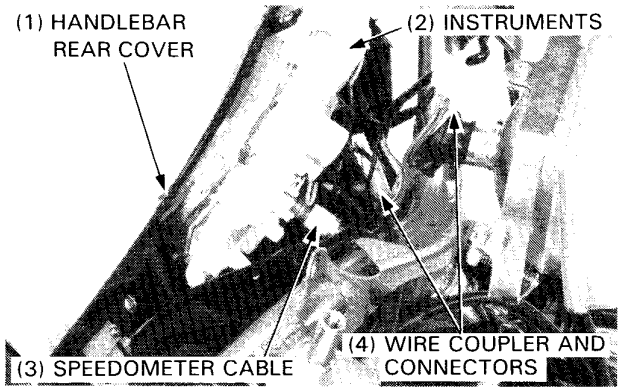

Remove the three screws to separate the instrument case from the rear cover.

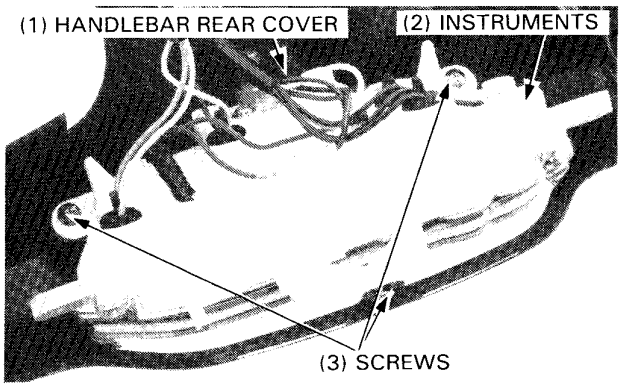

Remove the right and left switch attaching screws and the switches from the handlebar rear cover.

Install the rear cover in the reverse order of removal.

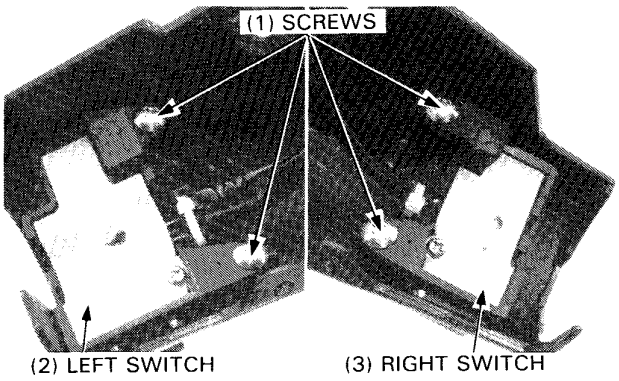

INSTRUMENT DISASSEMBLY/ASSEMBLY

Remove the three screws and the lens from the case.

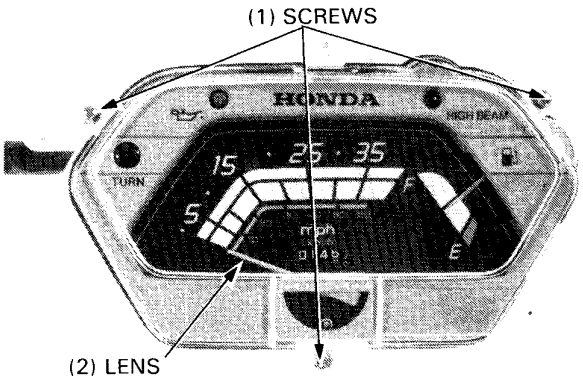

Disassemble the instruments by removing the screws and bulb sockets.
Assemble the instruments and the case in the reverse order of removal.

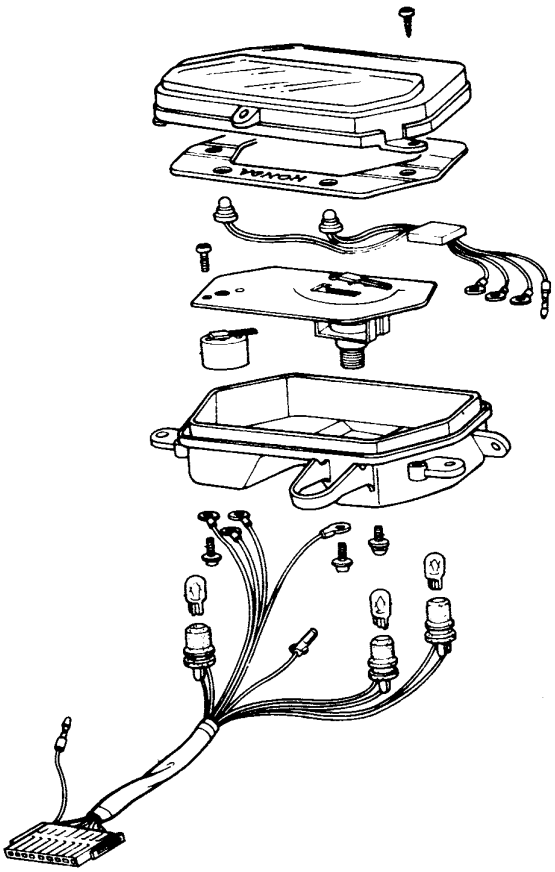

LIGHTS

HEADLIGHT REMOVAL/INSTALLATION

Remove the handlebar front cover (page 14-15).
Disconnect the headlight coupler.
Remove the headlight by removing the two mounting bolts.
Install in the reverse order of removal.

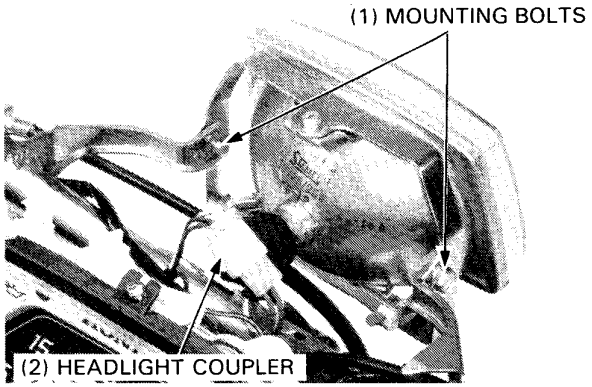

TAIL/BRAKE LIGHT BULB REPLACEMENT

Remove the two screws and the taillight lens.

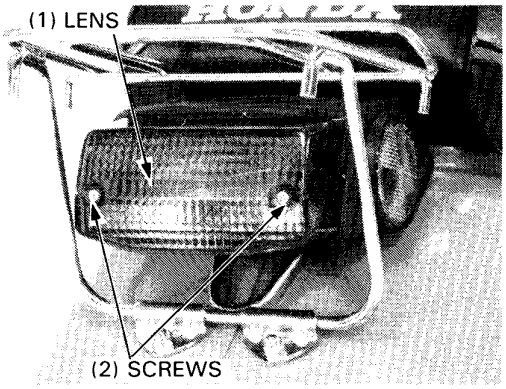

Replace the tail/brake light bulb with a new one.

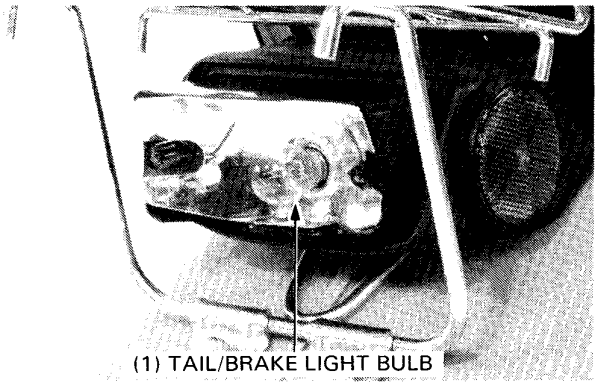

LICENSE LIGHT BULB REPLACEMENT

Remove the two rear reflector screws and the reflector.

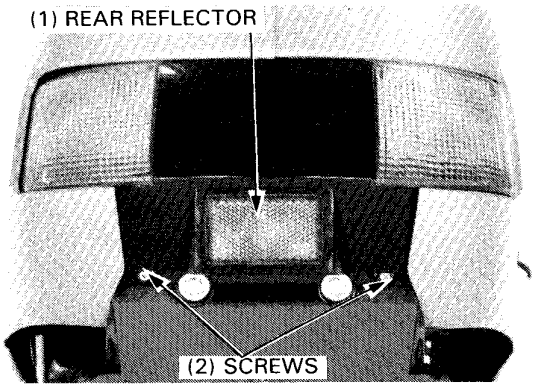

Replace the license light bulb with a new one.

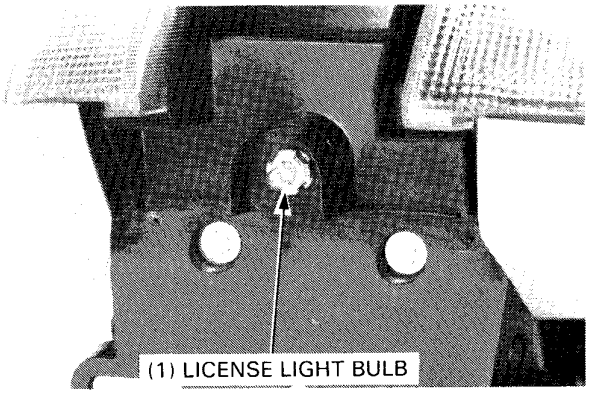

FRONT TURN SIGNAL LIGHT BULB REPLACEMENT

Remove the screw and the lens.
Replace the turn signal light bulb with a new one.

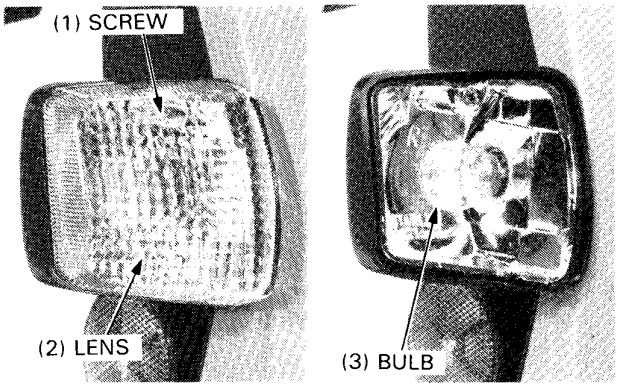

REAR TURN SIGNAL LIGHT BULB REPLACEMENT

Remove the rear reflector (page 14-18).
Remove the screws and the rear turn signal lens.

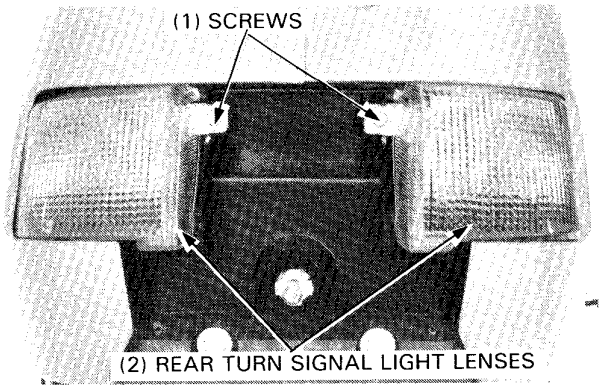

Replace the bulb with a new one.

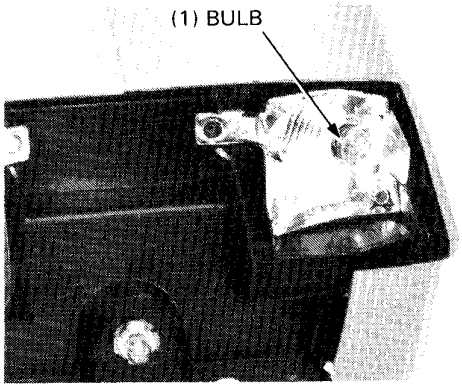

15. WIRING DIAGRAM

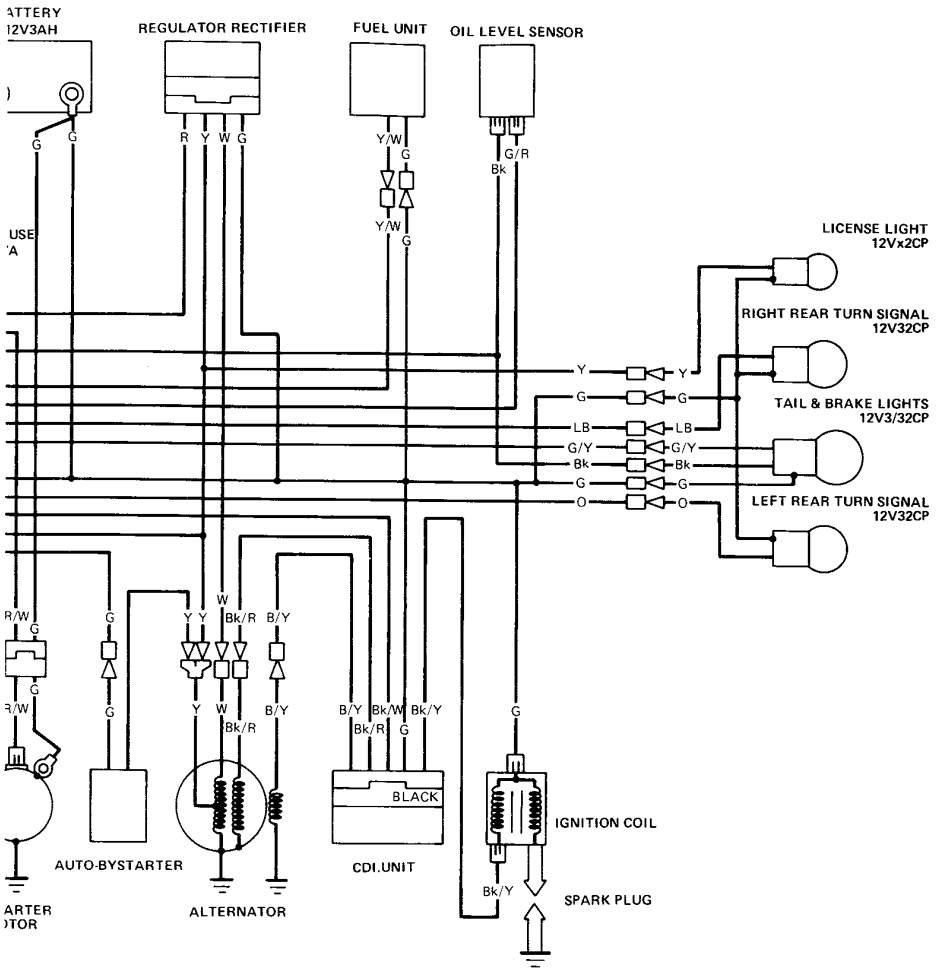

B = Blue
Bk = Black
Br = Brown
G = Green
Gr = Grey
LB = Light Blue
LG = Light Green
O = Orange
P = Pink
R = Red
W = White
Y = Yellow

15

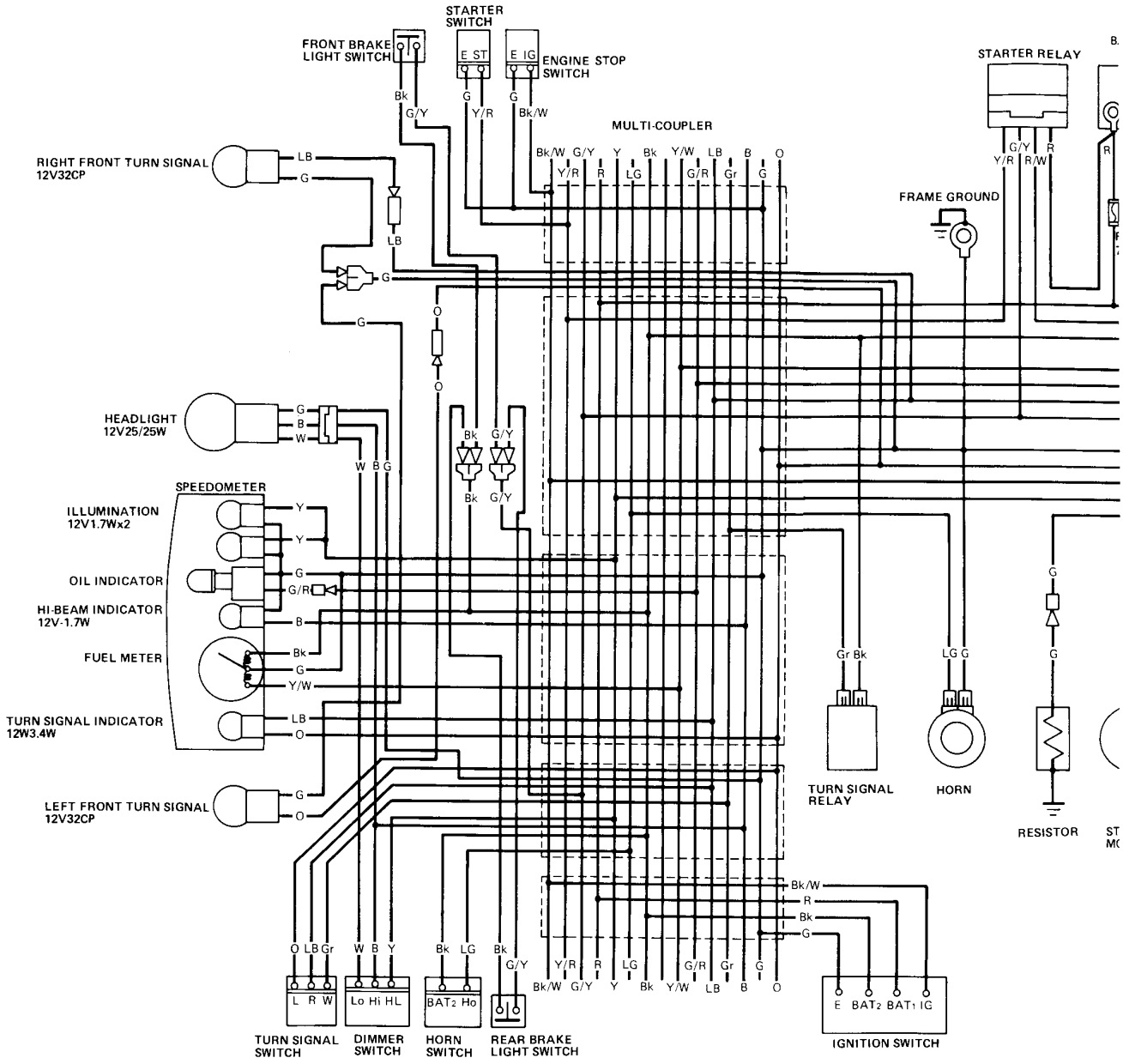

IGNITION SWITCH

	IG	E	BAT_1	BAT_2
OFF	●	●		
ON			●	●

STARTER SWITCH

	ST	E
FREE		
PUSH	●	●

ENGINE STOP SWITCH

	IG	E
OFF	●	●
RUN		

TURN SIGNAL SWITCH

	W	R	L
R	●	●	
N			
L		●	●

DIMMER SWITCH

	HL	Hi	Lo
Hi	●	●	
(N)	●	●	●
Lo	●		●

HORN SWITCH

	HO	BAT
FREE		
PUSH	●	●

16. TROUBLESHOOTING

ENGINE DOES NOT START OR IS HARD TO START	16-1	CLUTCH AND DRIVE/DRIVEN PULLEYS	16-3
ENGINE LACKS POWER	16-2	POOR HANDLING	16-4
POOR PERFORMANCE AT LOW AND IDLE SPEEDS	16-2	OIL LEVEL SENSOR	16-5
POOR PERFORMANCE AT HIGH SPEED	16-3	FUEL GAUGE	16-6
		STARTER MOTOR	16-7

ENGINE DOES NOT START OR IS HARD TO START

		Probable cause
1. Check if fuel is getting to carburetor by loosening drain screw	NOT GETTING TO CARBURETOR →	(1) No fuel in fuel tank (2) Clogged fuel tube to carburetor, vacuum tube to intake pipe, or fuel pipe (3) Clogged float valve (4) Clogged fuel tank cap breather hole
GETTING TO CARBURETOR ↓		
2. Try spark test	WEAK OR NO SPARK →	(1) Faulty spark plug (2) Fouled spark plug (3) Faulty CDI unit (4) Faulty alternator (5) Broken or shorted spark plug wire (6) Broken or shorted ignition coil (7) Faulty ignition switch
SPARK JUMPS ↓		
3. Test cylinder compression	LOW COMPRESSION →	(1) Stuck piston rings (2) Faulty or deteriorated reed valve (3) Worn cylinder and piston rings (4) Faulty cylinder or cylinder head casting (5) Compression leak past crankcase (6) Leaking cylinder head gasket
NORMAL COMPRESSION ↓		
4. Start by following normal starting procedure	ENGINE FIRES BUT SOON STOPS →	(1) Faulty auto bystarter (2) Air leaking past intake pipe (3) Improper ignition timing
ENGINE DOES NOT FIRE ↓		
5. Remove spark plug	WET PLUG →	(1) Carburetor flooded (2) Faulty auto bystarter (3) Throttle valve excessively open
DRY		

ENGINE LACKS POWER

		Probable cause
1. Lightly accelerate engine ENGINE SPEED INCREASES	ENGINE SPEED DOES NOT INCREASE SUFFICIENTLY →	(1) Clogged air cleaner (2) Restricted fuel flow (3) Clogged fuel tank cap breather hole (4) Clogged muffler
2. Check ignition timing CORRECT	INCORRECT →	(1) Faulty CDI unit (2) Faulty alternator
3. Test cylinder compression NORMAL	TOO LOW →	(1) Worn cylinder or piston rings (2) Blown cylinder head gasket (3) Flaws in cylinder or cylinder head (4) Faulty or deteriorated reed valve
4. Check carburetor for clogging NOT CLOGGED	CLOGGED →	Carburetor not serviced frequently enough
5. Remove spark plug NOT FOULED OR DISCOLORED	FOULED OR DISCOLORED →	(1) Plug not serviced frequently enough (2) Use of plug with improper heat range
6. Check if engine overheats NOT OVERHEATED	OVERHEATED →	(1) Worn cylinder or piston (2) Fuel-air mixture too lean (3) Use of improper grade of fuel (4) Excessive carbon build-up in combustion chamber (5) Ignition timing too advanced
7. Try rapid acceleration or run at high speed ENGINE DOES NOT KNOCK	ENGINE KNOCKS →	(1) Excessive carbon build-up in combustion chamber (2) Use of improper grade of fuel (3) Clutch slipping (4) Fuel-air mixture too lean

POOR PERFORMANCE AT LOW AND IDLE SPEEDS

		Probable cause
1. Check ignition timing CORRECT	INCORRECT →	(1) Faulty CDI unit (2) Faulty alternator
2. Check carburetor air screw for proper adjustment CORRECT	INCORRECT →	(1) Fuel air mixture too rich (Screw out to correct) (2) Fuel air mixture too lean (Screw in to correct) (3) Faulty auto bystarter

3. Check if air is leaking past intake pipe	LEAKING →	(1) Deteriorated insulator gasket (2) Loose carburetor (3) Deteriorated intake pipe gasket (4) Deteriorated insulator O-ring
NOT LEAKING ↓		
4. Try spark test	WEAK OR INTERMITTENT SPARK →	(1) Faulty, carbon or wet fouled spark plug (2) Faulty CDI unit (3) Faulty alternator (4) Faulty ignition coil (5) Broken or shorted spark plug wire (6) Faulty ignition switch
GOOD SPARK		

POOR PERFORMANCE AT HIGH SPEED

		Probale cause
1. Check ignition timing	INCORRECT →	(1) Faulty CDI unit (2) Faulty alternator
CORRECT ↓		
2. Disconnect fuel tube at fuel valve	FUEL FLOW RESTRICTED →	(1) No fuel in fuel tank (2) Clogged fuel tube or fuel filter (3) Clogged fuel tank cap breather hole
FUEL FLOWS FREELY ↓		
3. Remove carburetor and check for clogged jet	CLOGGED →	Clean
NOT CLOGGED		

CLUTCH AND DRIVE/DRIVEN PULLEYS

	Probable cause
1. If engine fires but scooter does not start →	(1) Worn or slipping drive belt (2) Broken ramp plate (3) Broken driven face spring (4) Separated clutch lining (5) Damaged driven pulley shaft splines (6) Faulty transmission (7) Seized transmission
2. If scooter creeps or engine starts but soon stops →	(1) Broken shoe spring (2) Stuck clutch outer and weight (3) Seized pivot
3. If engine lacks power at start (gradeability) →	(1) Worn or slipping drive belt (2) Worn weight roller (3) Seized drive pulley bearing (4) Weak driven face spring (5) Worn or seized driven pulley bearing

4. If engine lacks power at high speed	(1) Worn or slipping drive belt (2) Worn weight roller (3) Worn driven pulley bearing
5. If there is an abnormal noise or smell	(1) Oil or greasy substances on drive belt/pulley (2) Worn drive belt (3) Weak driven face spring (4) Worn or seized driven pulley bearing

POOR HANDLING

LOSS OF CONTROL — Check tire pressure	Probable cause
1. If steering is heavy	(1) Steering head adjuster too tight (2) Damaged steering cones or steel balls
2. If either wheel is wobbling	(1) Excessive wheel bearing play (2) Bent rim (3) Loose axle nut
3. If the scooter pulls to one side	(1) Misaligned front and rear wheels (2) Bent front fork

POOR FRONT/REAR SUSPENSION PERFORMANCE

	Probable cause
1. If suspension is too soft	(1) Weak spring (2) Excessive load
2. If suspension is too hard	Bent fork or shock rod
3. If suspension is noisy	(1) Slider binding (2) Shock spring binding (3) Damaged shock stopper rubber (4) Loose steering stem nut

POOR BRAKE PERFORMANCE

	Probable cause
1. If wear indicator arrow aligns with index mark on brake panel	(1) Worn brake shoes (2) Worn brake cam (3) Worn cam contacting face of shoe (4) Worn brake drum
2. If either brake is squealing	(1) Worn brake shoes (2) Foreign matter on brake lining (3) Rough shoe contact face of brake drum
3. If brake performance is poor	(1) Misadjusted or stretched brake cable (2) Brake shoes partially contacting brake drum (3) Mud or water in brake drum (4) Brake linings fouled with grease or oil

OIL LEVEL SENSOR

INDICATOR DOES NOT LIGHT WHEN IGNITION SWITCH IS TURNED ON OR WHEN THERE'S NO OIL

		Probable cause
1. Check battery circuit by operating turn signals	SIGNALS DIM, REMAIN ON OR DO NOT OPERATE →	(1) Blown fuse (2) Weak or dead battery (3) Faulty ignition switch (4) Disconnected wire connector (5) Broken wire harness
SIGNALS OPERATING CORRECTLY (60—120 flashes/min) ↓		
2. Remove instruments and connect green/red wire to battery positive terminal and green wire to negative terminal	LED DOES NOT LIGHT →	(1) Loose connection (2) Faulty LED or LED drive circuit
LED LIGHTS ↓		
3. Check for loose, disconnected or improperly connected terminal	INCORRECT →	(1) Loose or disconnected terminal (2) Broken wire harness (3) Incorrect connection
CORRECT ↓		
4. Remove oil level sensor and check operation Float up: Indicator off Float down: Indicator on	INCORRECT →	(1) Stuck float (2) Broken or shorted balancing coils
CORRECT		

INDICATOR LAMP REMAINS ON WITH SUFFICIENT OIL IN OIL TANK (IGNITION SWITCH ON)

		Probable cause
1. Check for loose, disconnected or improperly connected terminals	INCORRECT →	(1) Loose or disconnected terminal (2) Broken wire harness (3) Incorrect connection
CORRECT ↓		
2. Disconnect the green/red wire at instruments	LED REMAINS ON →	Faulty LED drive circuit
LED GOES OFF ↓		
3. Remove oil level sensor and check operation Float up: Indicator off Float down: Indicator on	INCORRECT →	(1) Jammed or stuck float (2) Broken or shorted indicator sensor

FUEL GAUGE

POINTER DOES NOT REGISTER CORRECTLY (IGNITION SWITCH ON)

		Probable cause
1. Check battery circuit by operating turn signals SIGNALS OPERATE PROPERLY	SIGNALS DIM, REMAIN ON, OR DO NOT OPERATE AT ALL →	(1) Blown fuse (2) Weak or dead battery (3) Faulty ignition switch (4) Disconnected terminal
↓ 2. Remove fuel level sensor and check operation by moving float Float up: Pointer at FULL Float down: Pointer at EMPTY POINTER DOES NOT MOVE	POINTER MOVES →	Faulty float
↓ 3. Short the open tank unit terminals on wire harness side POINTER DOES NOT MOVE	POINTER MOVES →	Broken or shorted balancing coil
↓ 4. Check for loose, disconnected or incorrectly connected terminals	INCORRECT →	(1) Disconnected terminal (2) Incorrectly connected terminals (3) Shorted or broken balancing coil/lead

POINTER FLUCTUATES OR SWINGS VIOLENTLY (IGNITION SWITCH ON)

		Probable cause
1. Check battery circuit by operating turn signals SIGNALS OPERATE PROPERLY	SIGNALS DIM, REMAIN ON, OR DO NOT OPERATE AT ALL →	(1) Blown fuse (2) Weak or dead battery (3) Broken or shorted ignition switch (4) Loose or disconnected terminal (5) Broken wire harness
↓ 2. Remove tank unit and check operation by moving float POINTER MOVES	POINTER DOES NOT MOVE →	Loose or poor connection in fuel level sensor
↓ 3. Move float up and down rapidly (up-and-down stroke/sec) POINTER MOVES	POINTER DOES NOT MOVE →	Lack of damper oil in meter
↓ 4. Check each connector CORRECT	INCORRECT →	(1) Loose or disconnected terminal (2) Shorted or broken balancing coil/lead

STARTER MOTOR

STARTER MOTOR DOES NOT TURN

		Probable cause
1. Check operation of brake stop light by operating brakes	DID NOT GO ON →	(1) Blown fuse (2) Weak or dead battery (3) Faulty stop light switch (4) Disconnected terminal (5) Broken or shorted ignition switch
WENT ON ↓		
2. Check battery circuit by operating turn signals	SIGNALS DIM, REMAIN ON, OR DO NOT OPERATE AT ALL →	Dead battery
SIGNALS OPERATE PROPERLY (60—120 flashes/ min) ↓		
3. Check starter relay operation by depressing starter switch	ABNORMAL →	(1) Poorly contacted starter switch (2) Broken or shorted starter relay (3) Loose connector or terminal
NORMAL ↓		
4. Test starter by connecting it to battery	DID NOT TURN →	(1) Worn brushes (2) Broken or shorted rotor windings (3) Broken starter motor sub wire (4) Loose terminal
TURNS		

STARTER MOTOR TURNS SLUGGISHLY OR FAILS TO CRANK ENGINE

		Probable cause
1. Check battery circuit by operating turn signals	SIGNALS DIM, REMAIN ON, OR DO NOT OPERATE AT ALL →	Dead battery
SIGNALS OPERATED PROPERLY ↓		
2. Connect starter motor sub wires across battery terminals	TURNS PROPERLY →	(1) Loose connector/terminal (2) Poorly contacted starter relay
TURNS SLOWLY (SPEED DOES NOT CHANGE)		

STARTER WON'T STOP

		Probable cause
1. Turn ignition switch OFF	STOPS →	Pinion stuck out
DOES NOT STOP →		Starter relay shorted or stuck closed