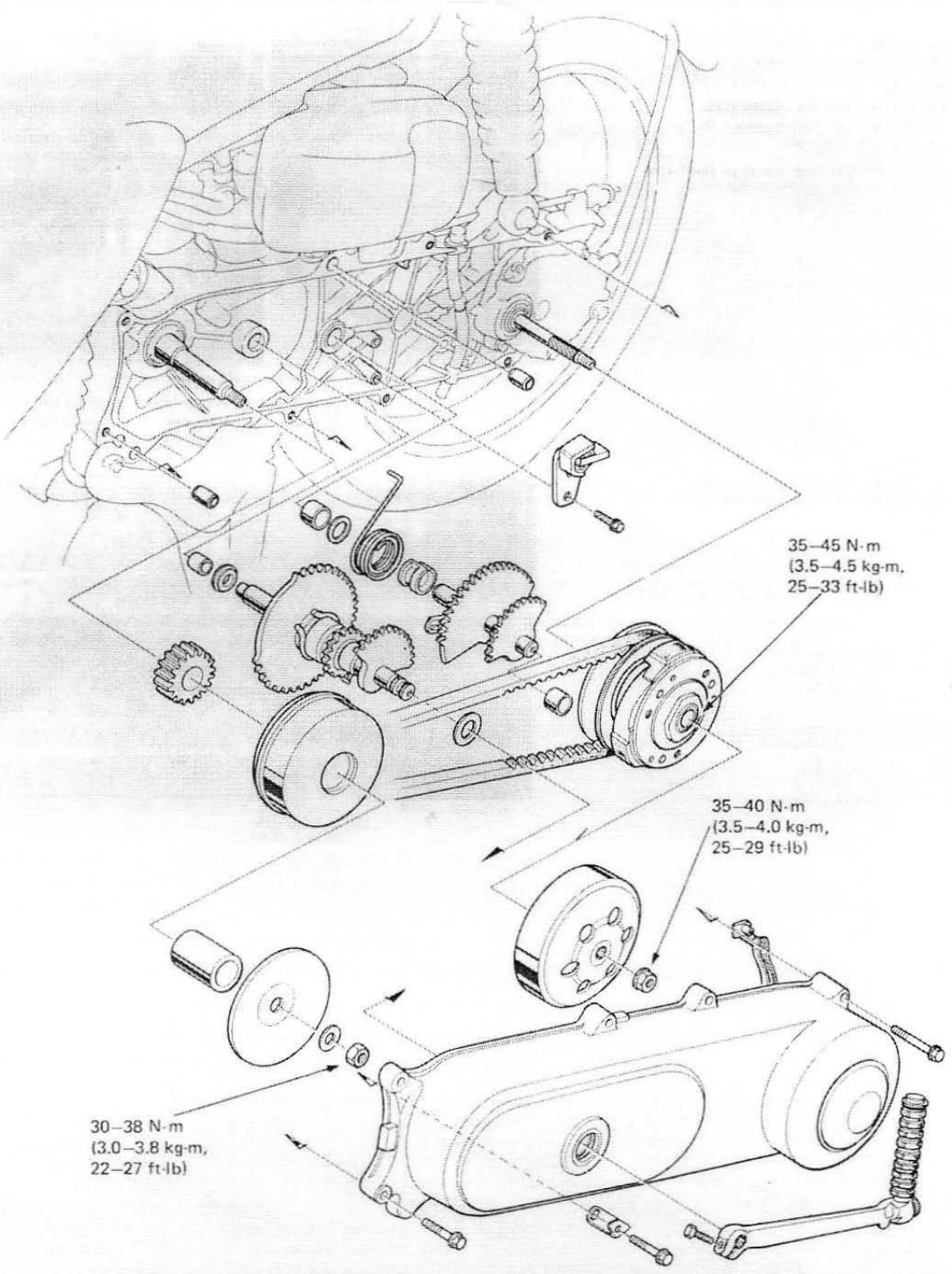

Date of Issue: Nov., 1981
© HONDA MOTOR CO., LTD.

8. DRIVE PULLEY/KICK STARTER/CLUCH/DRIVEN PULLEY

SERVICE INFORMATION	8–1
TROUBLESHOOTING	8–2
DRIVE PULLEY	8–3
KICK STARTER	8–10
CLUTCH/DRIVEN PULLEY	8–16

SERVICE INFORMATION

GENERAL

- Keep oily substances off the drive belt and pulley.

SPECIFICATIONS

ITEM			STANDARD mm (in)		SERVICE LIMIT mm (in)	
Drive belt width			14.0	(0.55)	13.0	(0.512)
Drive pulley	Weight roller O.D.		15.92-16.08	(0.627-0.633)	15.40	(0.606)
	Bushing I.D.		25.035-25.095	(0.9856-0.9880)	25.13	(0.989)
	Boss O.D.		24.995-25.025	(0.9841-0.9852)	24.960	(0.9847)
Driven pulley	Driven face A O.D.		33.950-38.975	(1.3366-1.3369)	33.930	(1.3358)
	Driven face B I.D.		34.000-34.025	(1.3386-1.3396)	34.060	(1.3409)
	Torque spring free length		93.4	(3.68)	88.0	(3.46)
Clutch	Clutch shoe thickness		4.0-4.1 (0.16	(0.16-0.16)	2.0	(0.08)
	Clutch outer I.D.		107.0-107.2	(4.21-4.22)	107.5	(4.23)
Kick starter	Spindle O.D.	A (Bushing)	9.965-9.987	(0.3923-0.3932)	9.900	(0.3898)
		B (Shaft)	13.957-13.984	(0.5495-0.5506)	13.900	(0.5472)
	Kick spindle bushing	I.D.	10.013-10.035	(0.3942-0.3951)	10.100	(0.3976)
		O.D.	13.973-14.000	(0.5501-0.5512)	13.900	(0.5472)
	Idle shaft bushing	I.D.	14.016-14.051	(0.5518-0.5532)	14.100	(0.5551)
		O.D.	17.965-18.000	(0.7069-0.7087)	17.900	(0.7047)
	Idle shaft O.D.	Left cover	13.957-13.984	(0.5495-0.5506)	13.900	(0.5472)
		Left crankcase	13.957-13.984	(0.5475-0.5506)	13.900	(0.5472)

TORQUE VALUES

Movable drive face	30–38 N.m (3.0–3.8 kg-m, 22–27 ft-lb)
Movable face seal	3–6 N.m (0.3–0.6 kg-m, 2.2–4.3 ft-lb)
Clutch outer	35–40 N.m (3.5–4.0 kg-m, 25–29 ft-lb)
Movable driven face	35–45 N.m (3.5–4.5 kg-m, 25–33 ft-lb)

TOOLS

Special

Lock Nut Wrench	07916–1870001
Driven Gear Holder	07924–1970000 or Band Strap Wrench (Commercially Available in U.S.A.)
Clutch Spring Compressor	07960–1870000
Shaft Protector	07931–1870000

Common

Universal Holder	07725–0030000
Attachment, 32 x 35 mm	07746–0010100
Pilot, 15 mm	07746–0040300

© HONDA MOTOR CO., LTD.

TROUBLESHOOTING

Engine starts, but motorcycle won't move
1. Worn drive belt
2. Broken ramp plate
3. Worn or damaged clutch lining
4. Broken torque spring
5. Damaged driven pulley shaft splines

Engine stalls or motorcycle starts suddenly
1. Broken clutch weight spring
2. Damaged clutch lining

Poor performance at high speed or lack of power
1. Worn drive belt
2. Weak torque spring
3. Worn weight roller
4. Faulty driven face
5. Worn or seized driven pulley bearing

Clutch noise or smell
1. Oil or grease on drive belt or pulley
2. Worn drive belt
3. Weak torque spring
4. Worn or seized driven pulley bearing

Date of Issue: Nov., 1981
© HONDA MOTOR CO., LTD.

DRIVE PULLEY

LEFT CRANKCASE COVER REMOVAL

Remove the kick starter pedal.

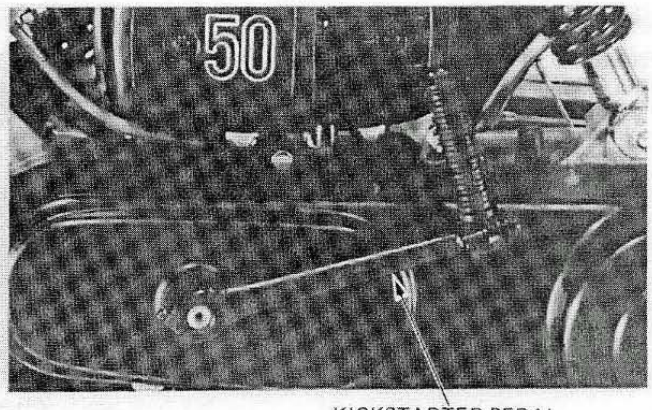

Remove the bolt attaching the left case cover.
Remove the left case cover while holding the kick-starter spindle.

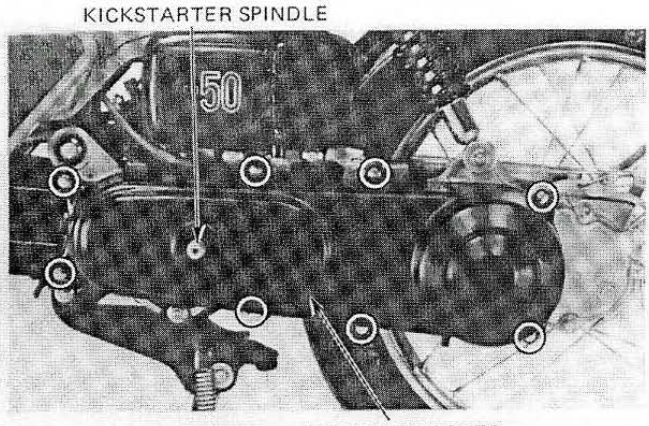

KICK SPINDLE BEARING INSPECTION

Check the kick spindle bearing play by rotating the bearing by hand.
Replace the bearing with a new one if it is noisy or has excessive play.

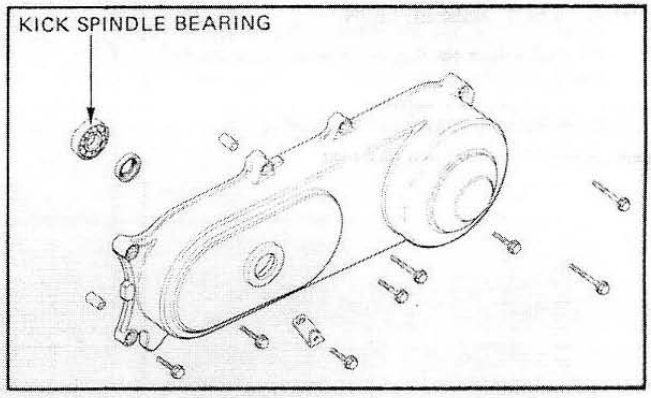

© HONDA MOTOR CO., LTD.

BEARING REPLACEMENT

Remove the oil seal and drive out the bearing.
Pack all bearing cavities with grease.
Install a new bearing from inside of the cover and install a new oil seal.

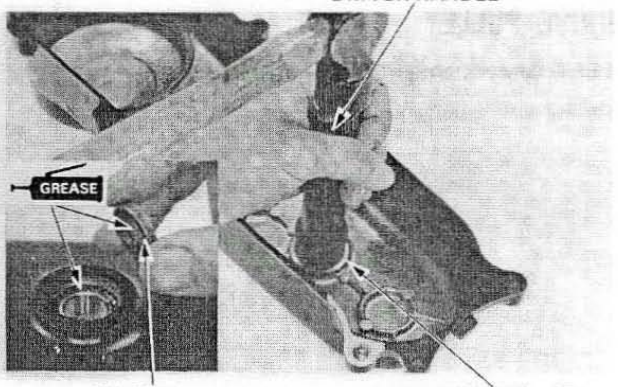

DRIVE BELT REMOVAL

Expand the movable driven face enough to remove the drive belt then remove the drive belt.

CAUTION:

Do not bend the drive belt or it will be damaged.

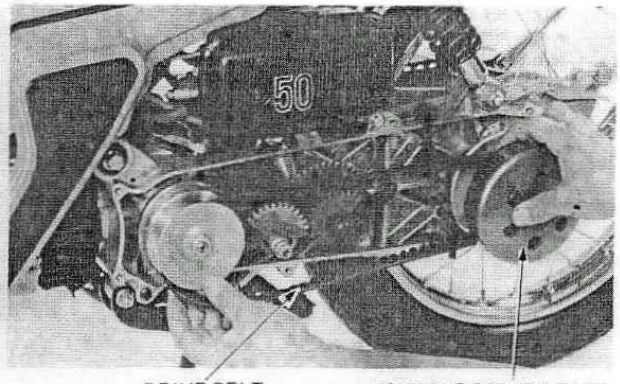

DRIVE BELT INSPECTION

Check the drive belt for cracks, separation or abnormal or excessive wear.
Measure the drive belt's width.

SERVICE LIMIT: 13.0 mm (0.51 in)

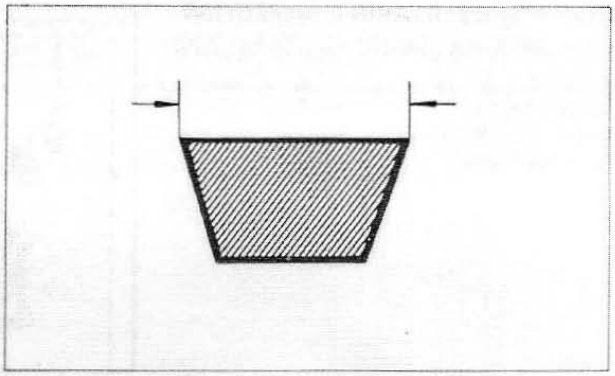

© HONDA MOTOR CO., LTD.

MOVABLE DRIVE FACE REMOVAL/ DISASSEMBLY

Unhook the return spring end from the left crankcase cover.
Remove the kick starter spindle and idle shaft.

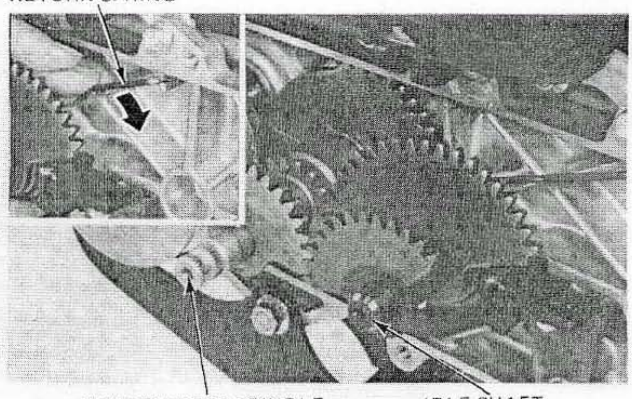

Hold the crankshaft with a starter driven gear holder.
Remove the nut and the movable drive face assembly.

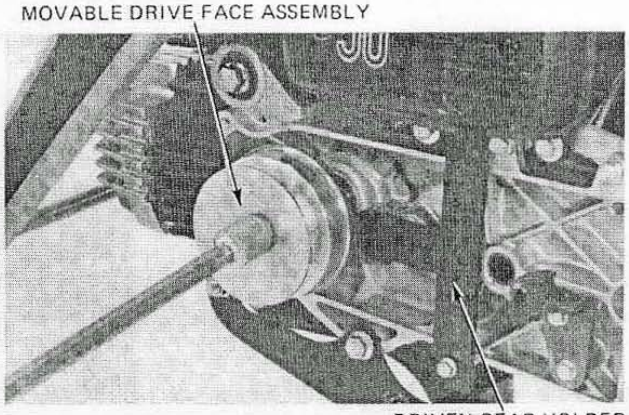

MOVABLE DRIVE FACE DISASSEMBLY

Remove the three bolts attaching the movable drive face seal and remove the seal.

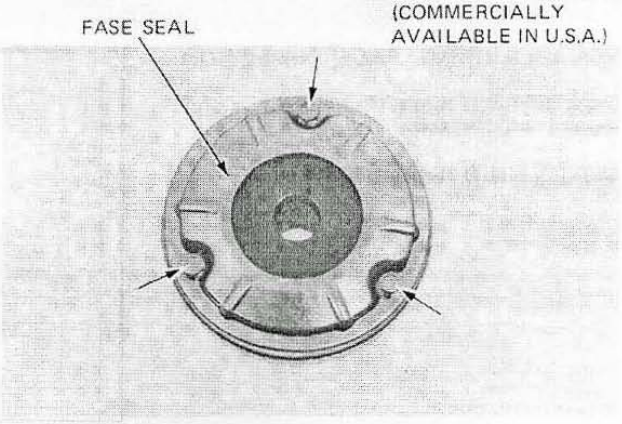

© HONDA MOTOR CO., LTD.

Remove the ramp plate.

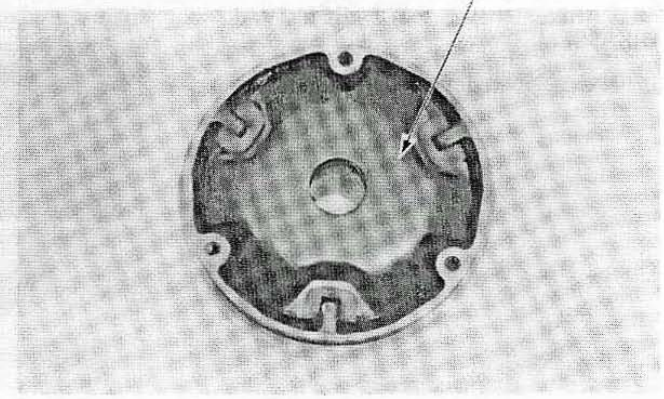

Remove the weight rollers.

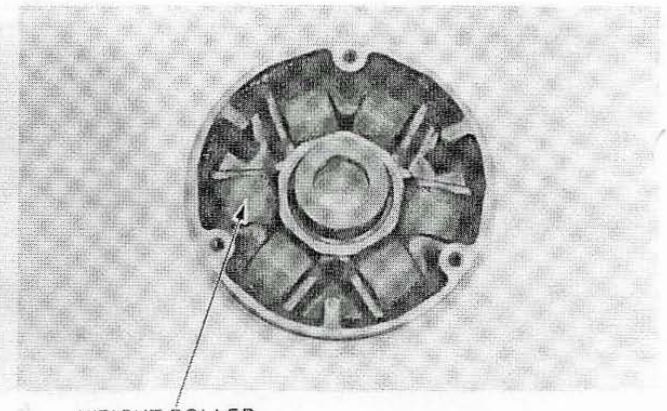

MOVABLE DRIVE FACE INSPECTION

Check each roller for wear or damage.
Measure each roller O.D.

SERVICE LIMIT: 15.40 mm (0.606 in)

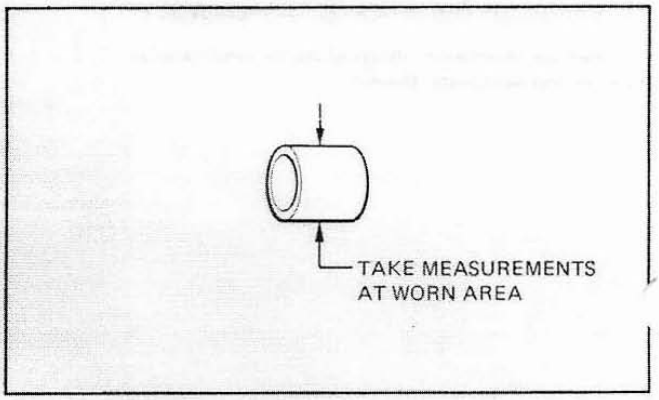

Date of Issue: Nov., 1981
© HONDA MOTOR CO., LTD.

Measure the movable drive face bushing I.D.

SERVICE LIMIT: 25.130 mm (0.9894 in)

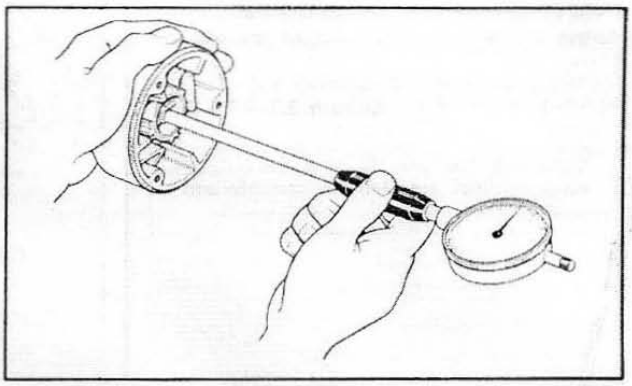

Inspect the drive face boss for wear or damage.
Measure the O.D. at the drive face contacting face.

SERVICE LIMIT: 24.960 mm (0.9827 in)

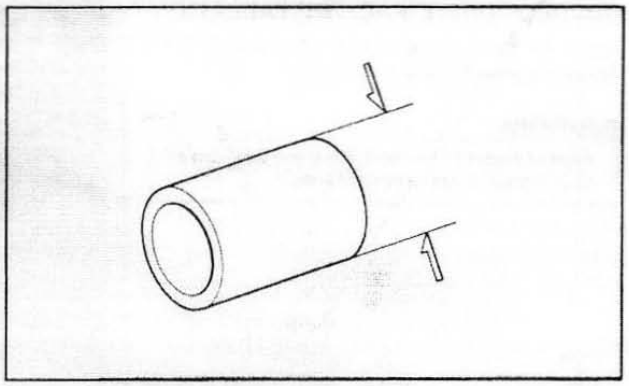

MOVABLE DRIVE FACE ASSEMBLY

Lubricate the inside of the drive face with grease, then install the weight rollers.

NOTE

Apply 10 – 15g (0.35 – 0.53 oz) of grease to the inside of the drive face evenly.

SPECIFIED GREASE:

LITHIUM BASED GREASE
(MITSUBISHI HD-3
NIPPON SEKIYU LIPANOX DELUXE 3
IDEMITSU CORONEX 3 or equivalent)

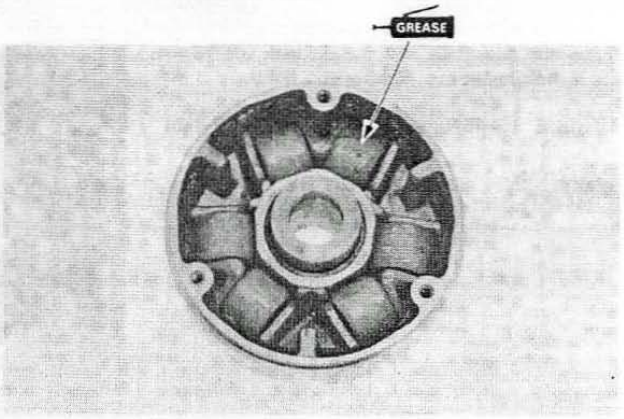

© HONDA MOTOR CO., LTD.

Install the ramp plate and movable face seal.
Torque the seal attaching bolts to the specified torque.

TORQUE: 3–6 N·m (0.3–0.6 kg-m, 2.2–4.3 ft-lb)

NOTE

Make sure that the O-ring is correctly positioned.

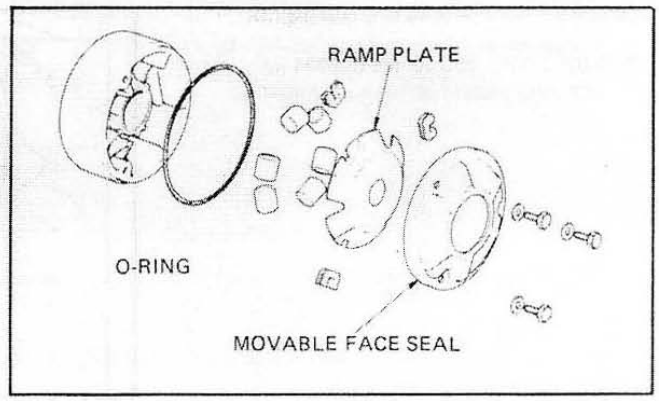

MOVABLE DRIVE FACE INSTALLATION

Install the drive face boss in the movable drive face. Install the assembly on the crankshaft.

CAUTION:

Clean the hole in the movable drive face, drive face boss and clean the crankshaft.

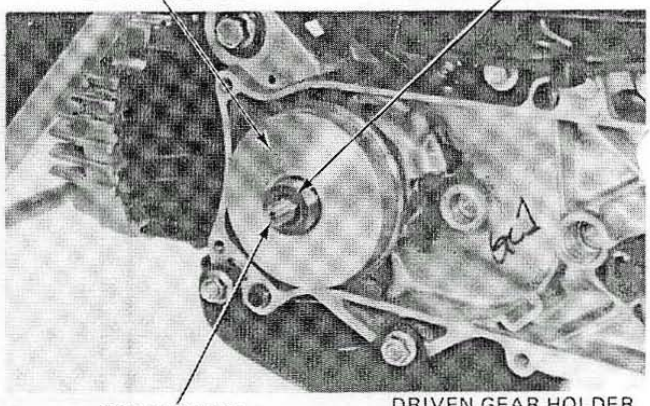

Install the drive face and tighten with the 10 mm nut by holding the crankshaft with a holder.

TORQUE: 35–40 N·m (3.5–4.0 kg-m, 25–29 ft-lb)

CAUTION:

Do not get oil or grease on the drive face.

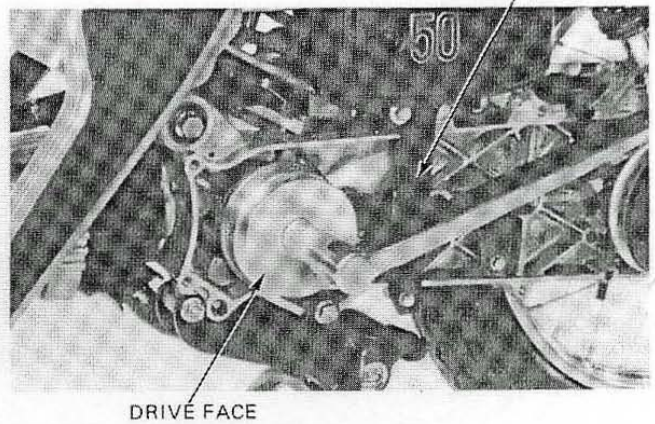

© HONDA MOTOR CO., LTD.

Install the kick starter idle shaft and the kick starter spindle (Page 8-15).
Install the drive belt over the pulleys.

CAUTION:

- *Do not bend the drive belt.*
- *Do not get oil or grease on the drive belt.*

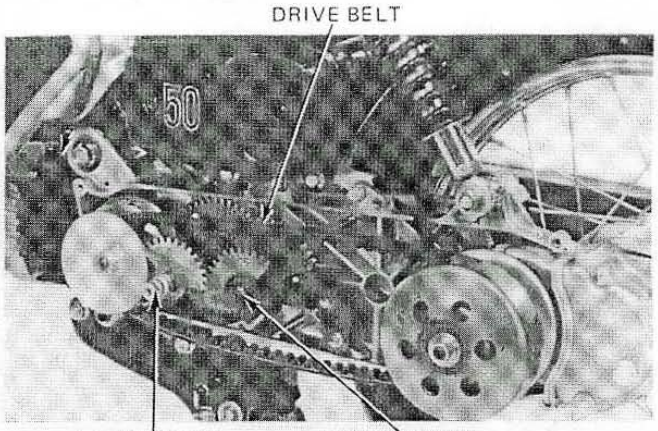

LEFT CRANKCASE COVER INSTALLATION

Install the seal rubber to the cover and install the dowel pins.
Install the idle shaft bushing into the left crankcase cover.
Install the left crankcase cover.

NOTE

Do not tighten the cover bolts at this time.

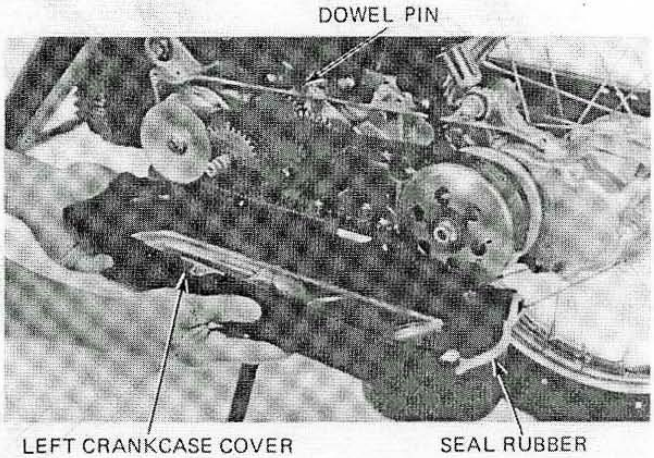

Install the kick pedal by aligning its punch mark with the punch mark of the spindle.
Tighten the pedal pinch bolt.
Tighten the crankcase cover bolts while pushing and holding the kick starter pedal down 15° or more.

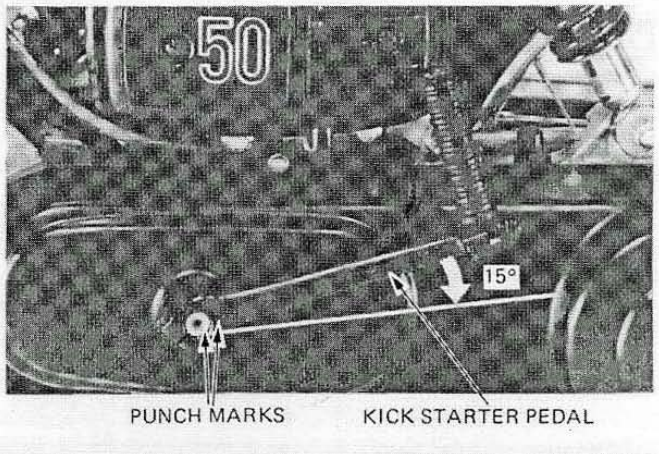

© HONDA MOTOR CO., LTD.

KICK STARTER

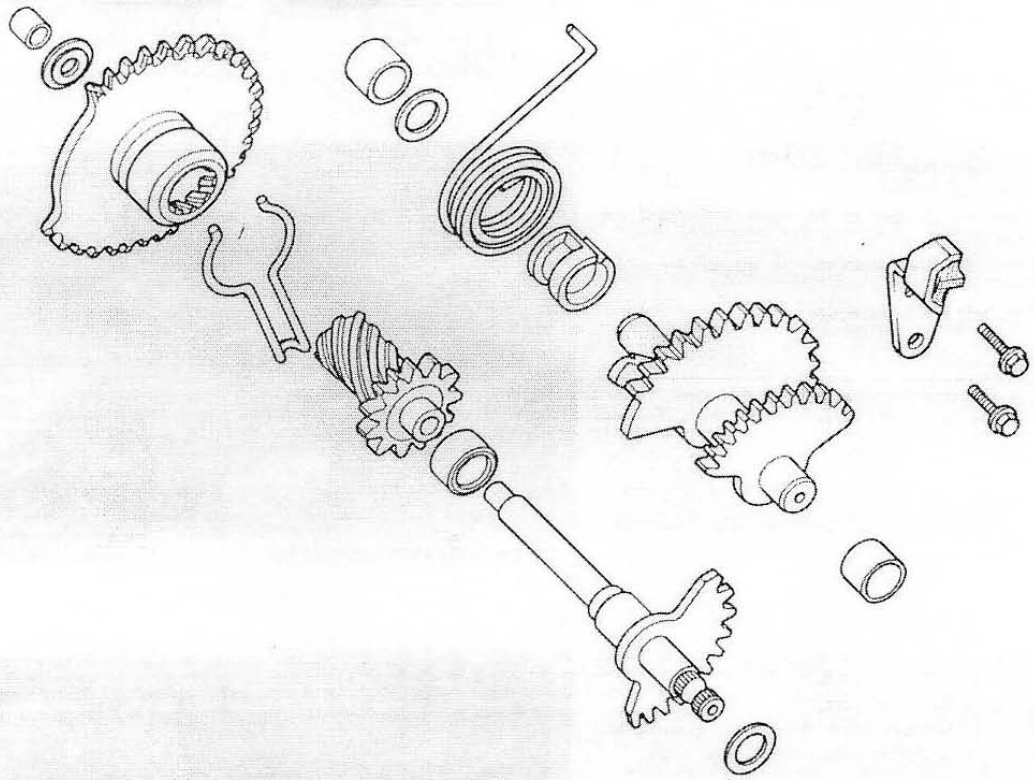

Date of Issue: Nov., 1981
© HONDA MOTOR CO., LTD.

KICK STARTER REMOVAL

Remove the left case cover and drive belt.
Unhook the return spring end from the left crankcase.
Remove the kick starter spindle and starter idle shaft.

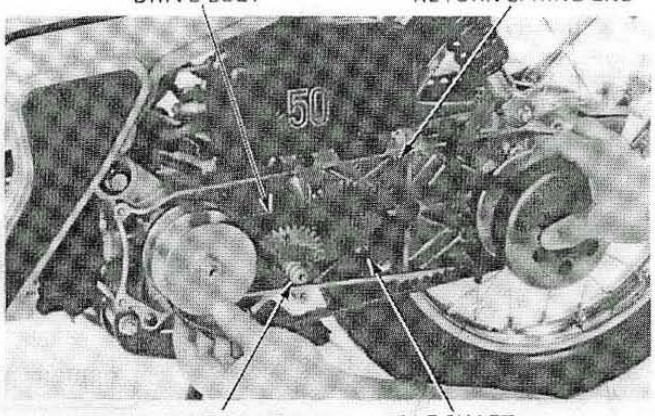

Remove the stopper plate.

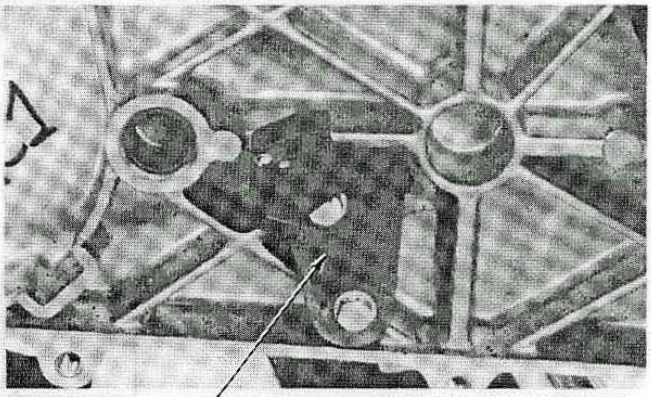

Remove the movable drive face assembly (Page 8-5).
Remove the kick starter driven gear using a commercial gear puller with puller attachment.

CAUTION:

Hold the driven gear with fingers to prevent it from falling out during this operation.

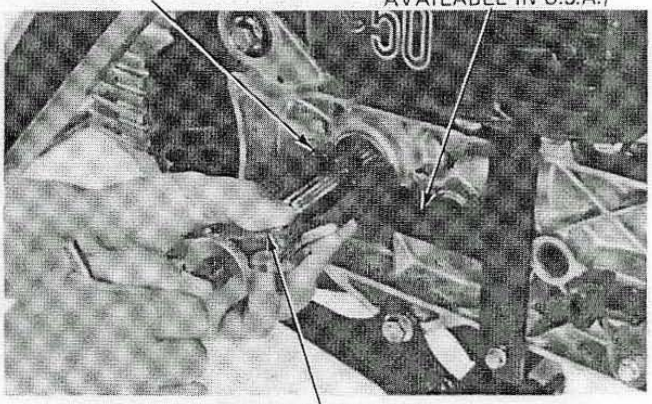

© HONDA MOTOR CO., LTD.

KICK STARTER DISASSEMBLY

Disassemble the kick starter spindle.

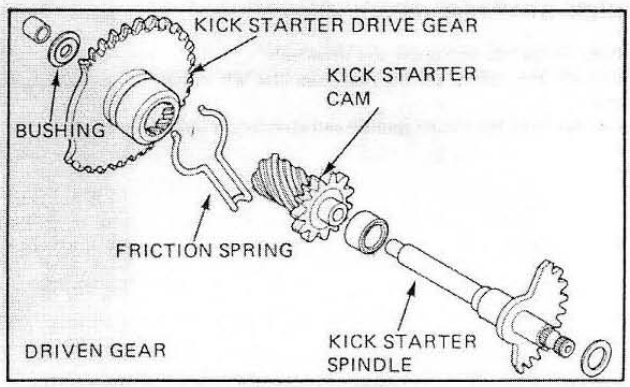

Disassemble the kick starter idle shaft.

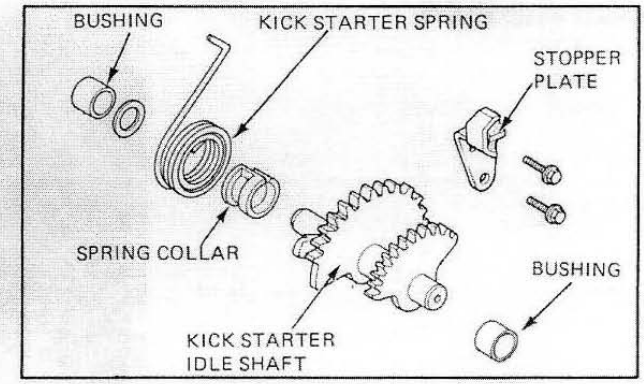

KICK STARTER INSPECTION

Inspect the kick starter spindle for wear or damage. Measure the spindle O.D.

SERVICE LIMIT:

A (Bushing) : 9.900 mm (0.3898 in)
B (Shaft): : 13.900 mm (0.5472 in)

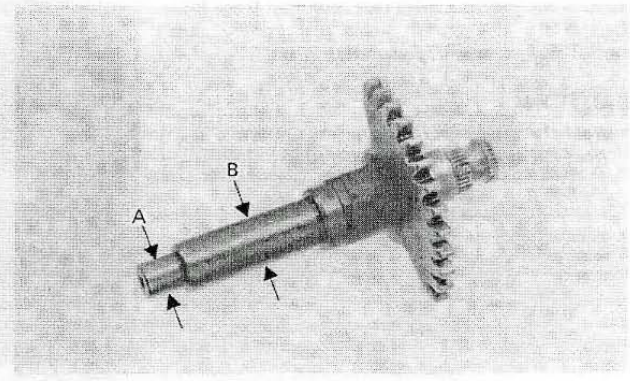

© HONDA MOTOR CO., LTD.

Inspect the kick starter spindle bushing for wear or damage.
Measure the bushing I.D.

SERVICE LIMIT: 10.100 mm (0.3976 in)

Measure the bushing O.D.

SERVICE LIMIT: 13.900 mm (0.5472 in)

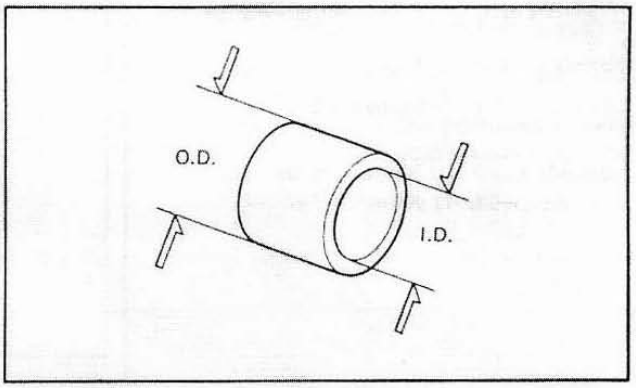

Measure the kick starter cam I.D.

SERVICE LIMIT: 14.050 mm (0.5531 in)

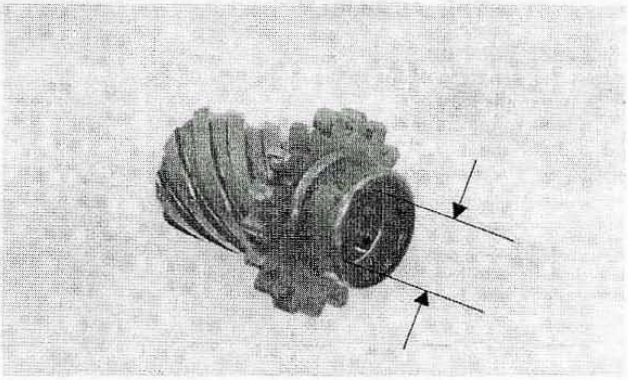

Inspect the kick starter idle shaft for wear or damage.
Measure the idle shaft O.D.

SERVICE LIMIT: 13.900 mm (0.5472 in)

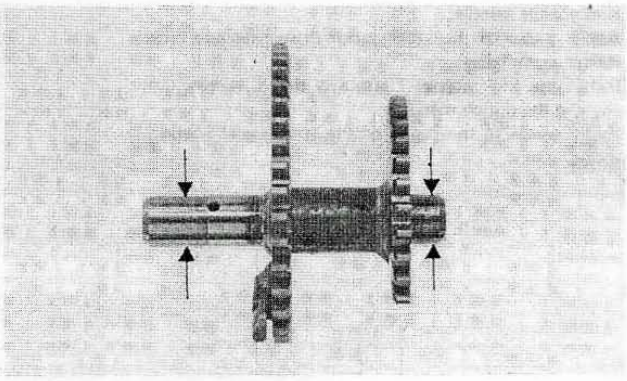

© HONDA MOTOR CO., LTD.

Inspect the kick starter idle shaft bushings for wear or damage.
Measure the bushing I.D.

SERVICE LIMIT: 14.100 mm (0.5551 in)

Measure the bushing O.D.

SERVICE LIMIT: 17.900 mm (0.7047 in)

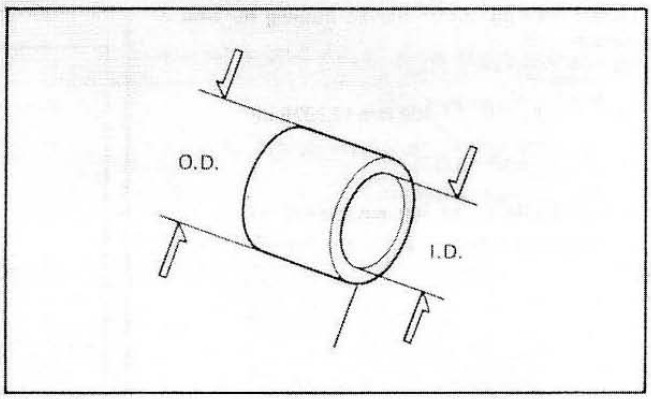

KICK STARTER ASSEMBLY

Kick starter idle shaft:
Insert the short end of the spring in the hole of the kick starter idle shaft.
Install the spring collar with the groove in the collar aligned with the spring.
Install the thrust washer on the idle shaft.

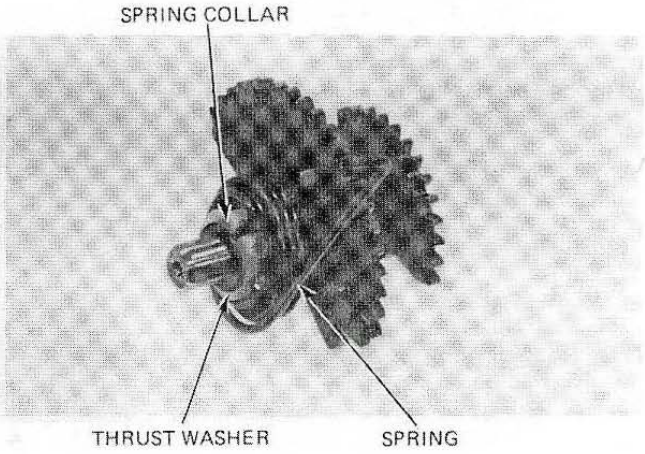

Kick starter spindle:
Apply grease to the kick starter drive gear and kick starter worm gears.
Install the kick starter cam into the drive gear by aligning the punch marks.
Apply grease to the inside of the starter gear friction spring.

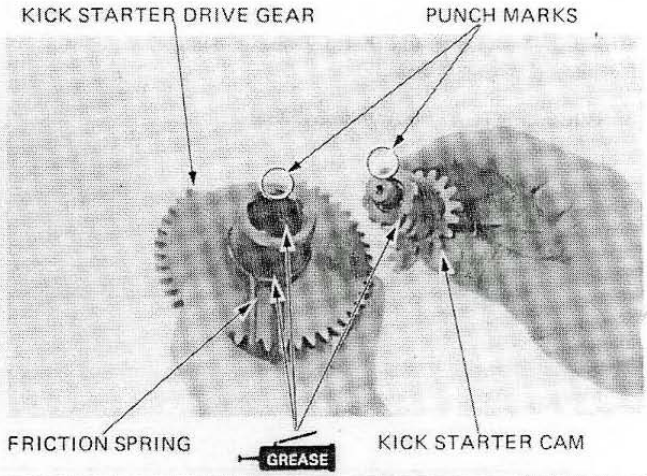

Date of Issue: Nov., 1981
© HONDA MOTOR CO., LTD.

KICK STARTER INSTALLATION

Install the kick starter driven gear by cleaning the gear matching surface.
Clean the taper on the crankshaft and install the driven gear.
Install the drive face assembly (Page 8-8).
Apply grease to the kick spindle and idle shaft bushing and install then into the left crankcase.
Position the thrust washer on the left crankcase by coating to the washer with grease.
Install the stopper plate.

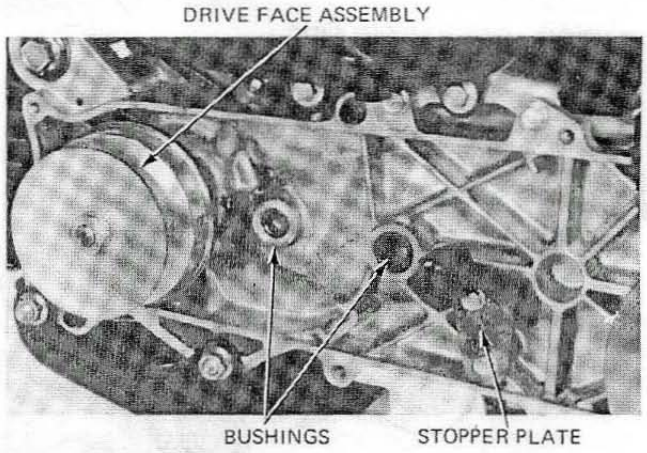

Install the kick starter drive gear and can aligning the friction spring with the groove in the left crankcase.
Point the arrow mark on the drive gear toward the crankshaft, placing the cam on the drive gear by turning it clockwise.
Install the idle shaft, aligning its punch mark with the kick starter cam punch mark.

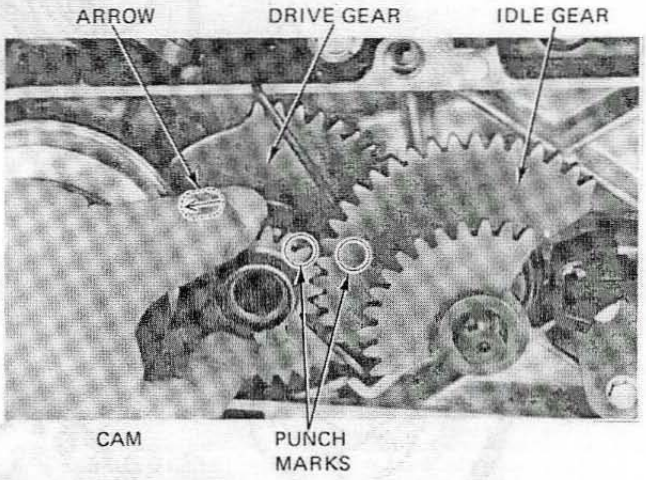

Install the kick starter spindle by aligning the punch marks.
Hook the return spring to the left crankcase as shown.
Install the thrust washer on the spindle.

Install the drive belt and install the crankcase cover (Page 8-9).

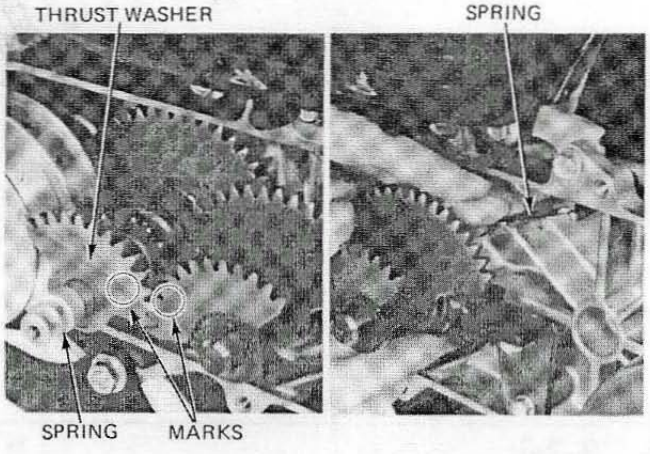

© HONDA MOTOR CO., LTD.

CLUTCH / DRIVEN PULLEY

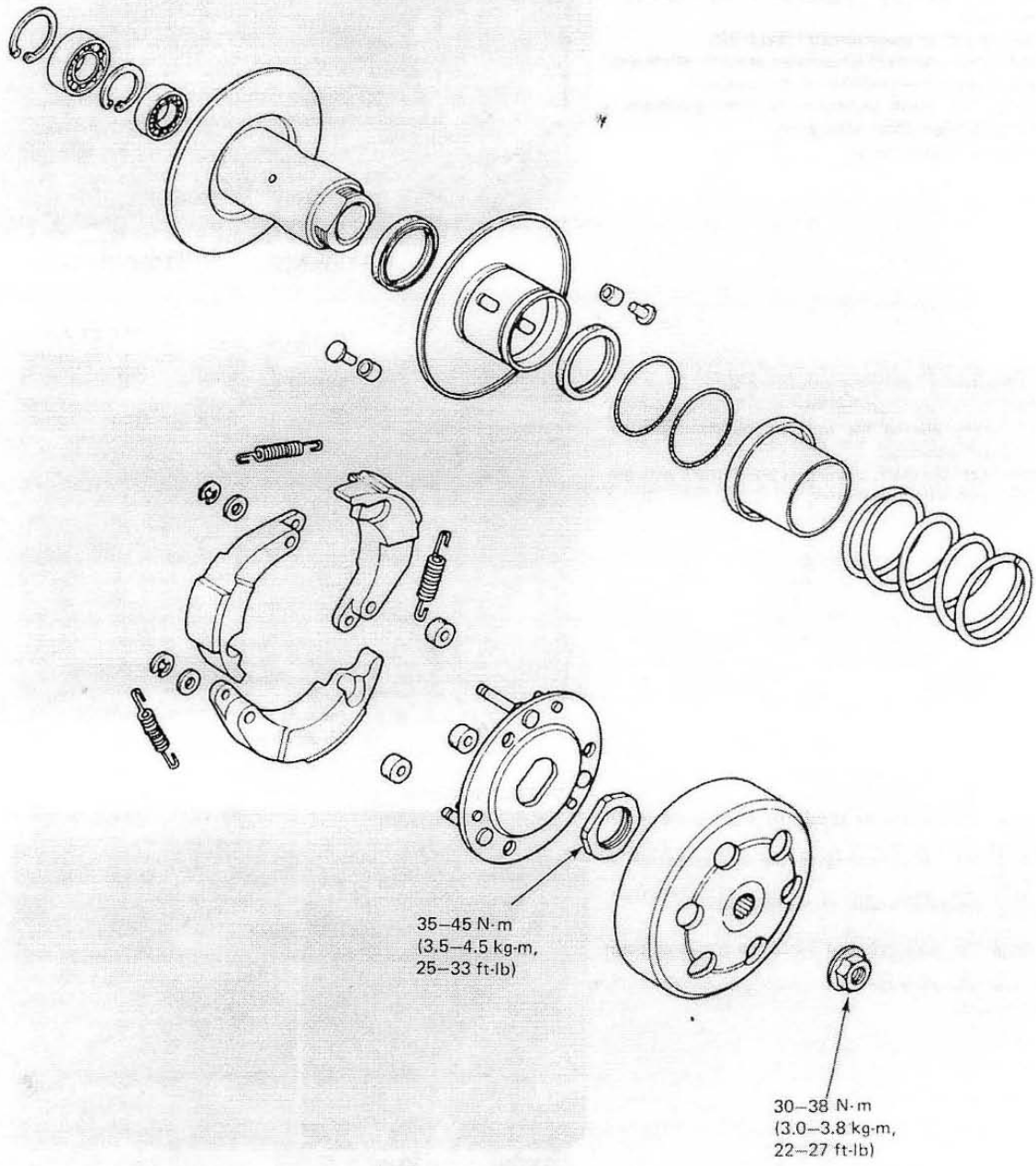

Date of Issue: Nov., 1981
© HONDA MOTOR CO., LTD.

CLUTCH REMOVAL

Remove the left case cover.

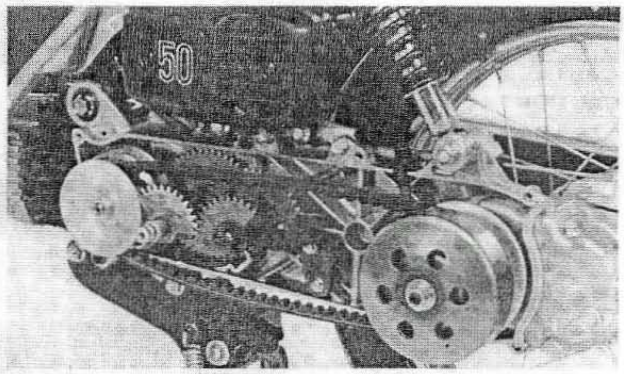

Remove the 10 mm nut holding the clutch outer. Remove the clutch outer.

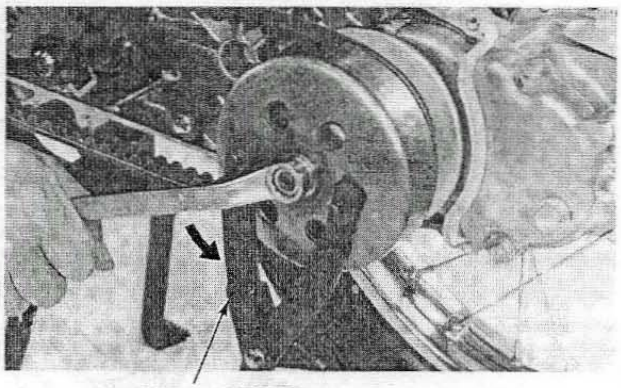

Withdraw the movable driven face from the drive shaft with the drive belt while expanding the movable driven face.

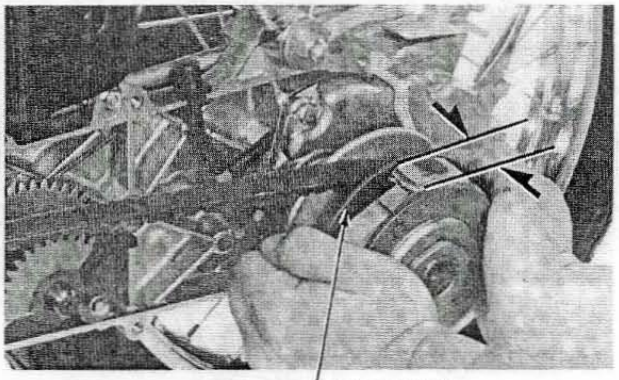

© HONDA MOTOR CO., LTD.

DRIVEN FACE DISASSEMBLY

Remove the 28 mm nut using the special tools.

CAUTION:

Do not overtighten the clutch spring compressor.

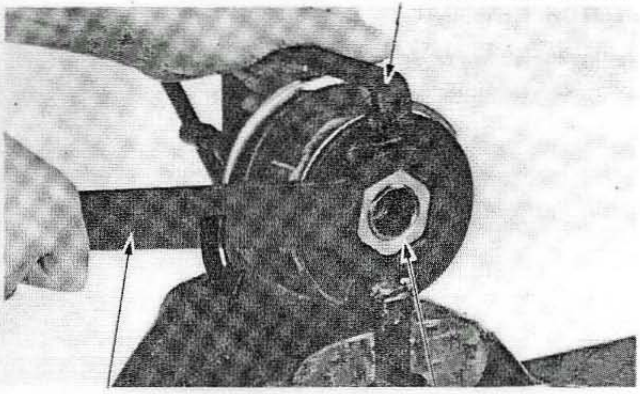

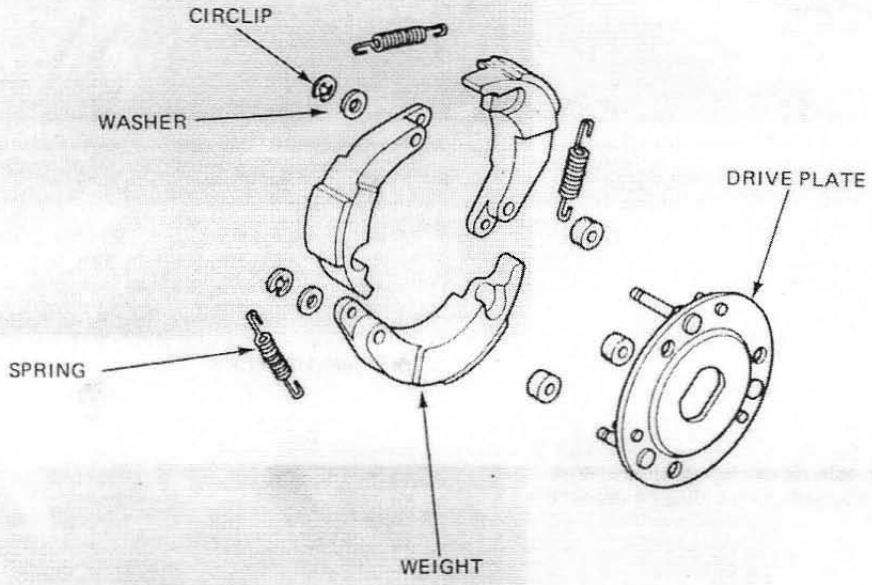

© HONDA MOTOR CO., LTD.

Remove the seal collar.

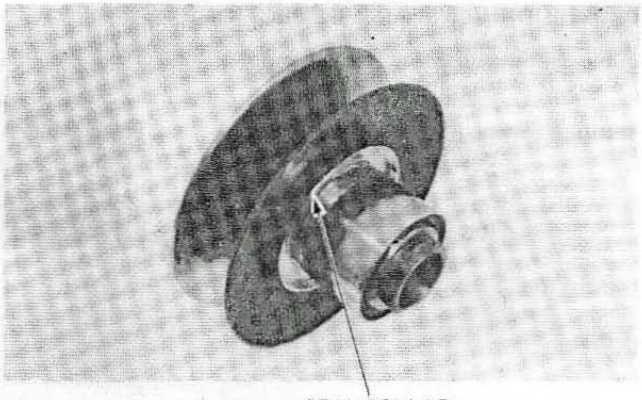

Withdraw the guide roller pin and guide roller.

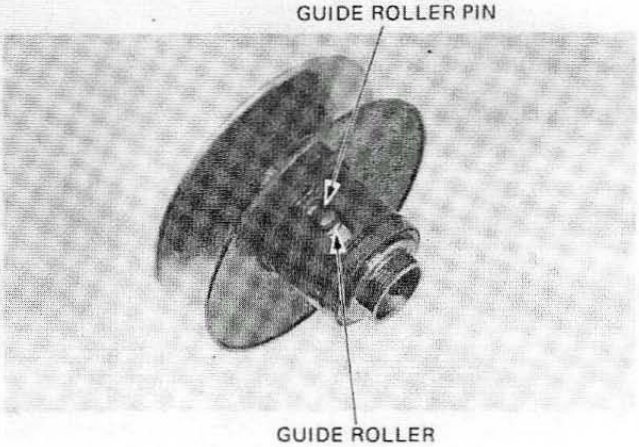

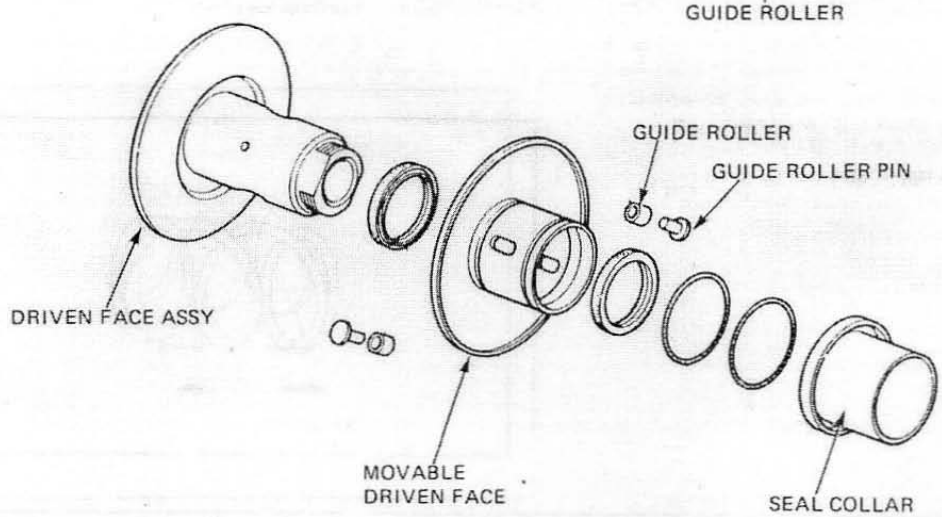

© HONDA MOTOR CO., LTD.

CLUTCH/DRIVEN FACE INSPECTION

Inspect the clutch outer for wear or damage.
Measure the clutch outer I.D.

SERVICE LIMIT: 107.5 mm (4.23 in)

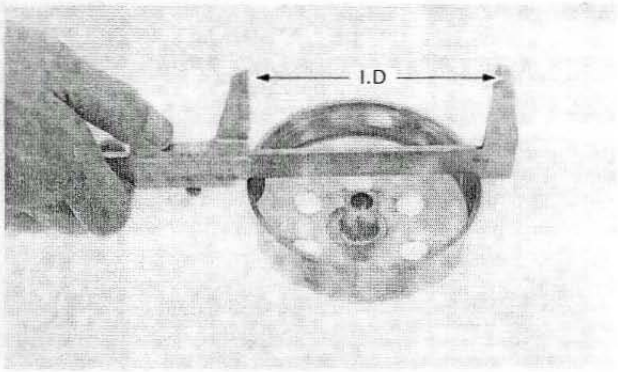

Inspect the clutch shoes for wear or damage.
Measure the thickness of each shoe.

SERVICE LIMIT: 2.0 mm (0.079 in)

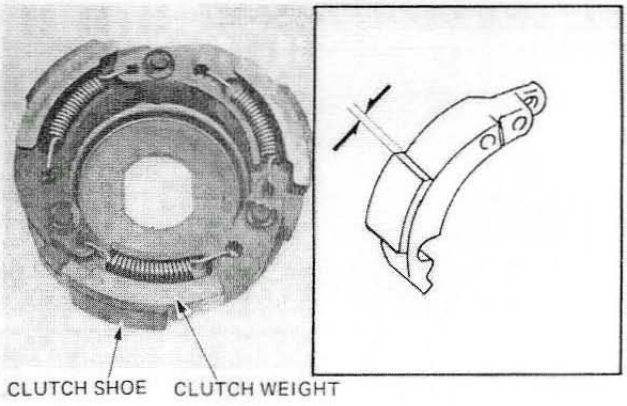

Measure the driven face spring free length.

SERVICE LIMIT: 88.0 mm (3.46 in)

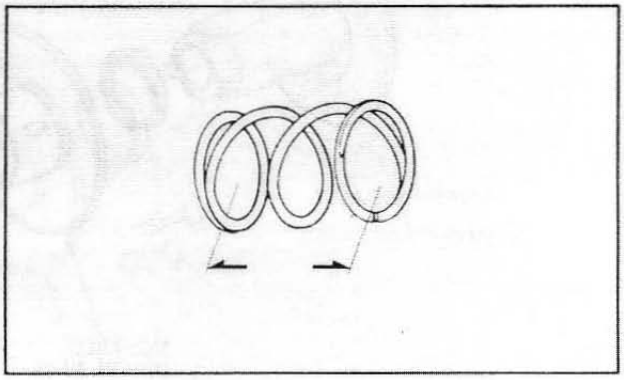

© HONDA MOTOR CO., LTD.

Inspect the driven face assembly for wear or damage. Measure the driven face O.D.

SERVICE LIMIT: 33.930 mm (1.3358 in)

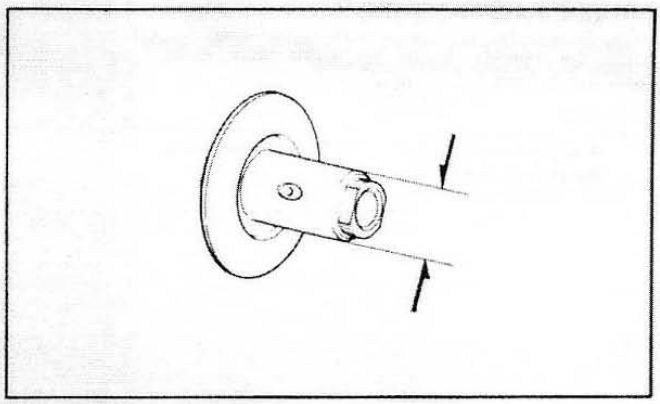

Inspect the movable driven face for wear or damage. Measure the movable driven face I.D.

SERVICE LIMIT: 34.060 mm (1.3409 in)

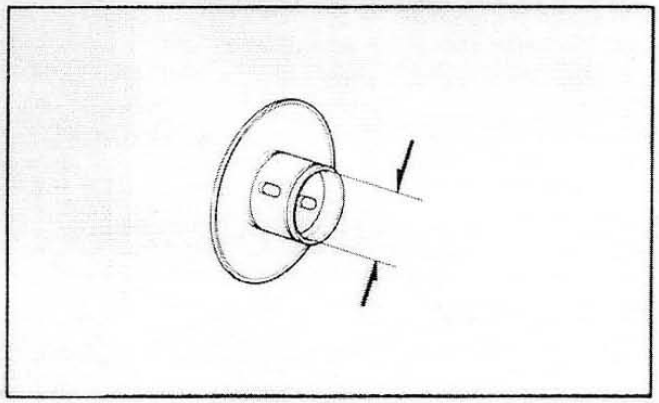

Check the oil seals for wear, damage or other faults. Check the movable drive face O-rings and replace if worn or damaged.

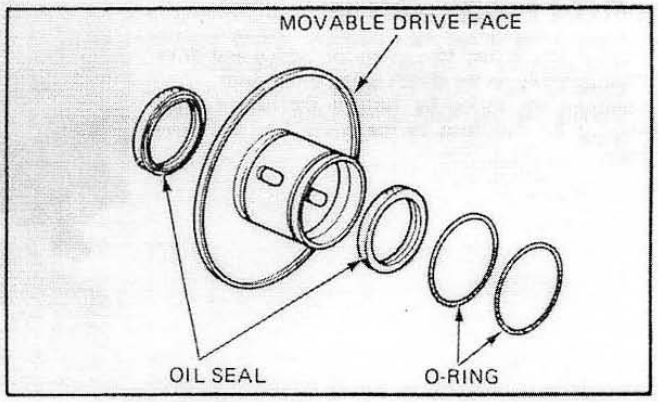

© HONDA MOTOR CO., LTD.

DRIVEN FACE ASSEMBLY

Install the movable driven face, guide roller, guide roller pin, oil seals and O-rings.

NOTE

Apply 4.0 – 4.5g (0.14 – 0.16 oz.) of grease to the areas shown.

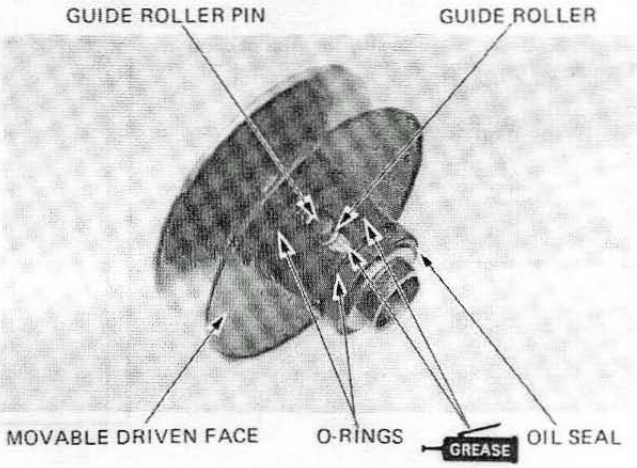

Slide the seal collar onto the movable driven face.

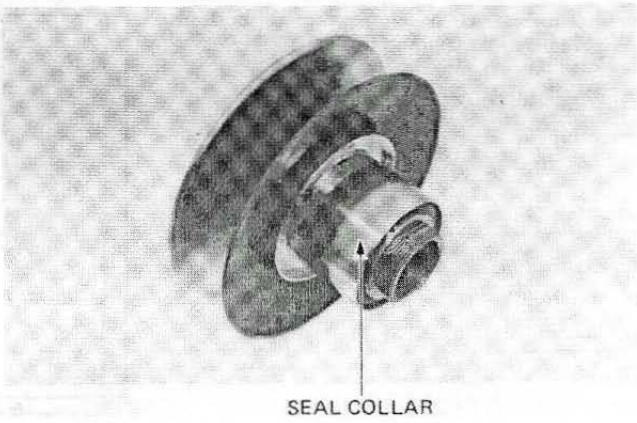

DRIVEN PULLEY ASSEMBLY

Position the driven face assembly, spring and drive plate assembly on the clutch spring compressor. Compress the spring by turning the handle while aligning the flat faces of the driven face and drive plate.

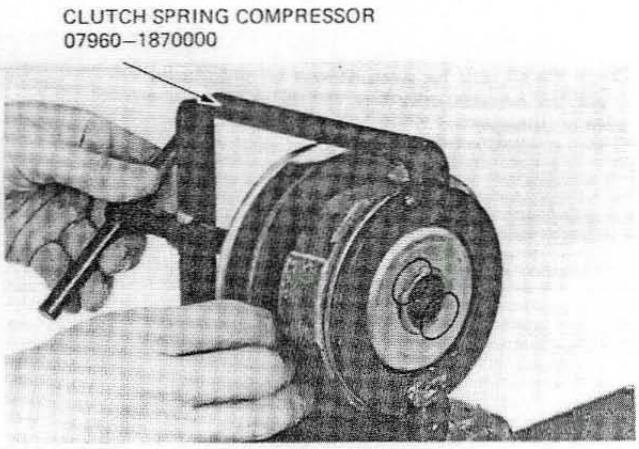

© HONDA MOTOR CO., LTD.

Install and tighten the 28 mm special nut.

TORQUE: 35–45 N·m (3.5–4.5 kg-m, 25–33 ft-lb)

CLUTCH SPRING COMPRESSOR 07960–1870000

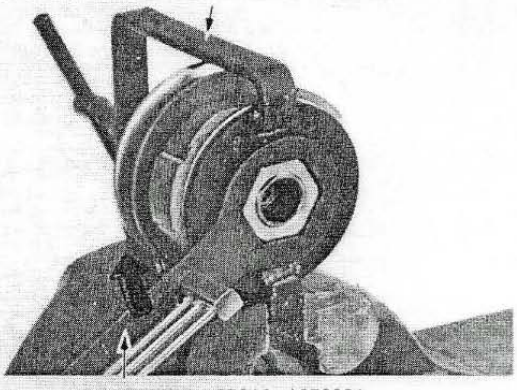

LOCK NUT WRENCH, 39 mm 07916–1870001

CLUTCH/DRIVEN PULLEY INSTALLATION

Place the drive belt on the driven face.
Install the driven face on the drive shaft while spreading the movable driven face.

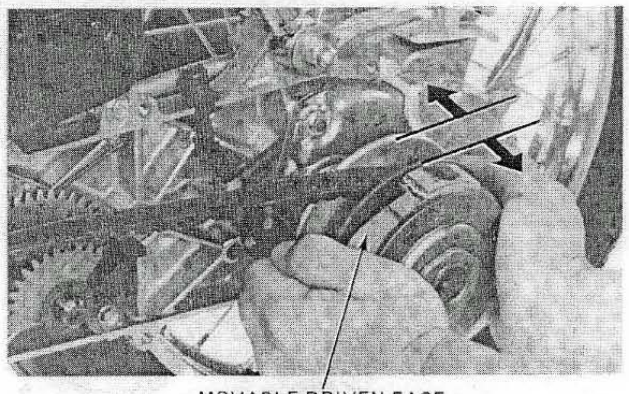

MOVABLE DRIVEN FACE

Install the clutch outer and tighten the nut.

TORQUE: 35–40 N·m (3.5–4.0 kg-m, 25–29 ft-lb)

Install the left case cover (Page 8-9).
Install the kick starter pedal.

CLUTCH OUTER

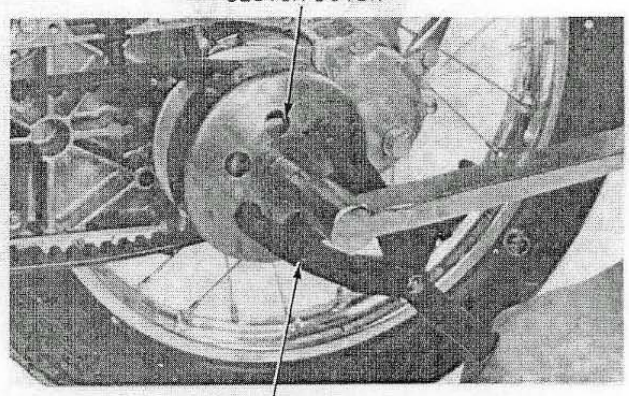

UNIVERSAL HOLDER

© HONDA MOTOR CO., LTD.